Barudan

HIGH SPEED AUTOMATIC EMBROIDERY MACHINE

ELITE PRO
BEVT-Z9/15 01CB

PARTS LIST

BEVT-Z9/Z15 01CB

HIGH SPEED AUTOMATIC EMBROIDERY MACHINE

CONTENTS

00	Table·Frame	05	Jump
01A	Head·Bed A	06-1	Thread guide (Z9)
01B	Head·Bed B	06-2	Thread guide (Z15)
02A	Thread cut A	07	Color change
02B	Thread cut B	08	Drive
02C	Thread cut C	10A	Pantograph drive A (QS)
03	Take up lever	10B	Pantograph drive B (QS)
04A-1	Needle bar A (Z9)	10C	Pantograph drive C
04A-2	Needle bar A (Z15)	10D	Pantograph drive D
04B	Needle bar B	10E	Pantograph drive E
04C	Needle bar C	11	Control
04D	Needle bar D	12	Accessories

Machine layout (BEVT-Z901CB)

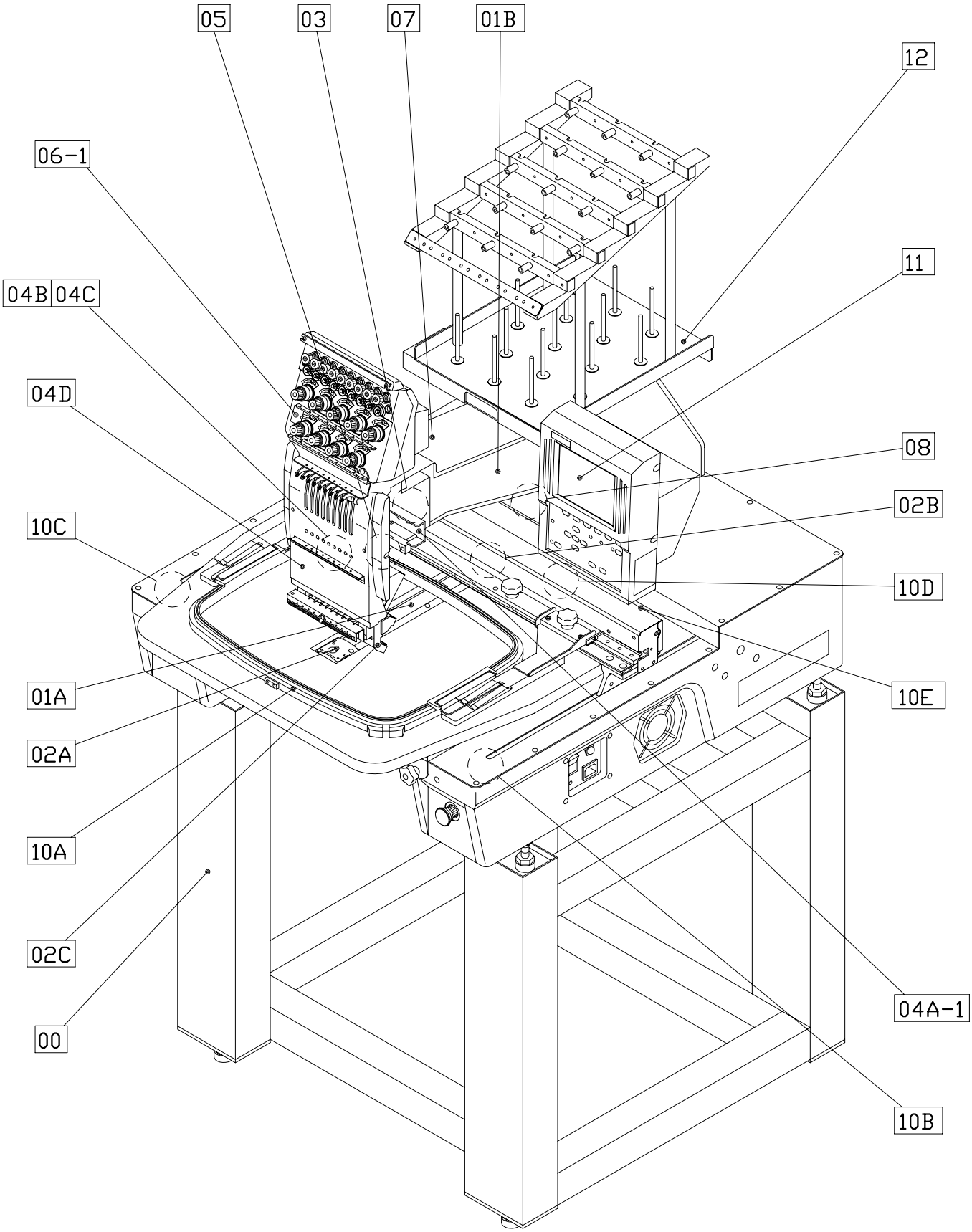

BEVT-Z901CB

060306

Machine layout (BEVT-Z1501CB)

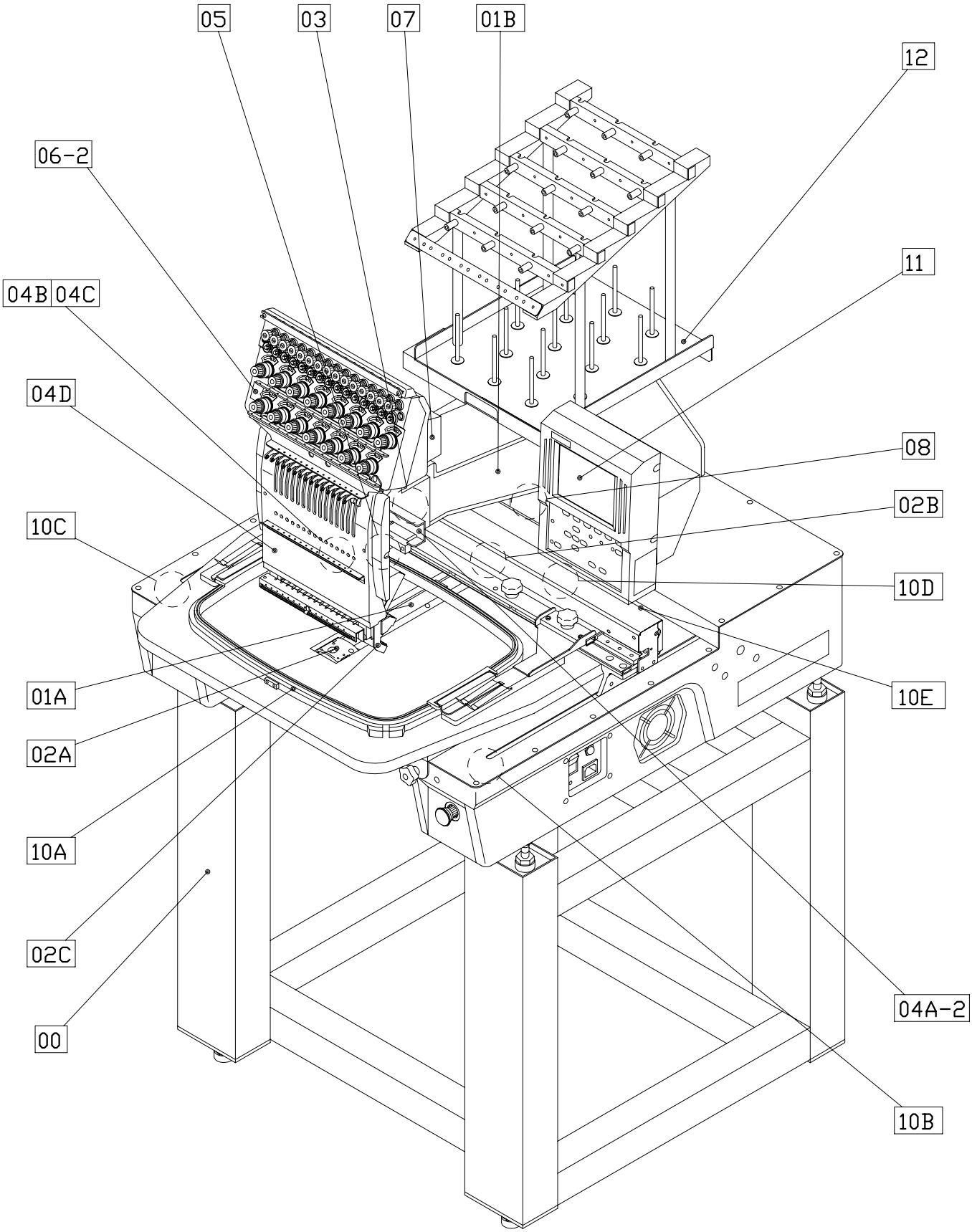

BEVT-Z1501CB

060306

00 Table・Frame

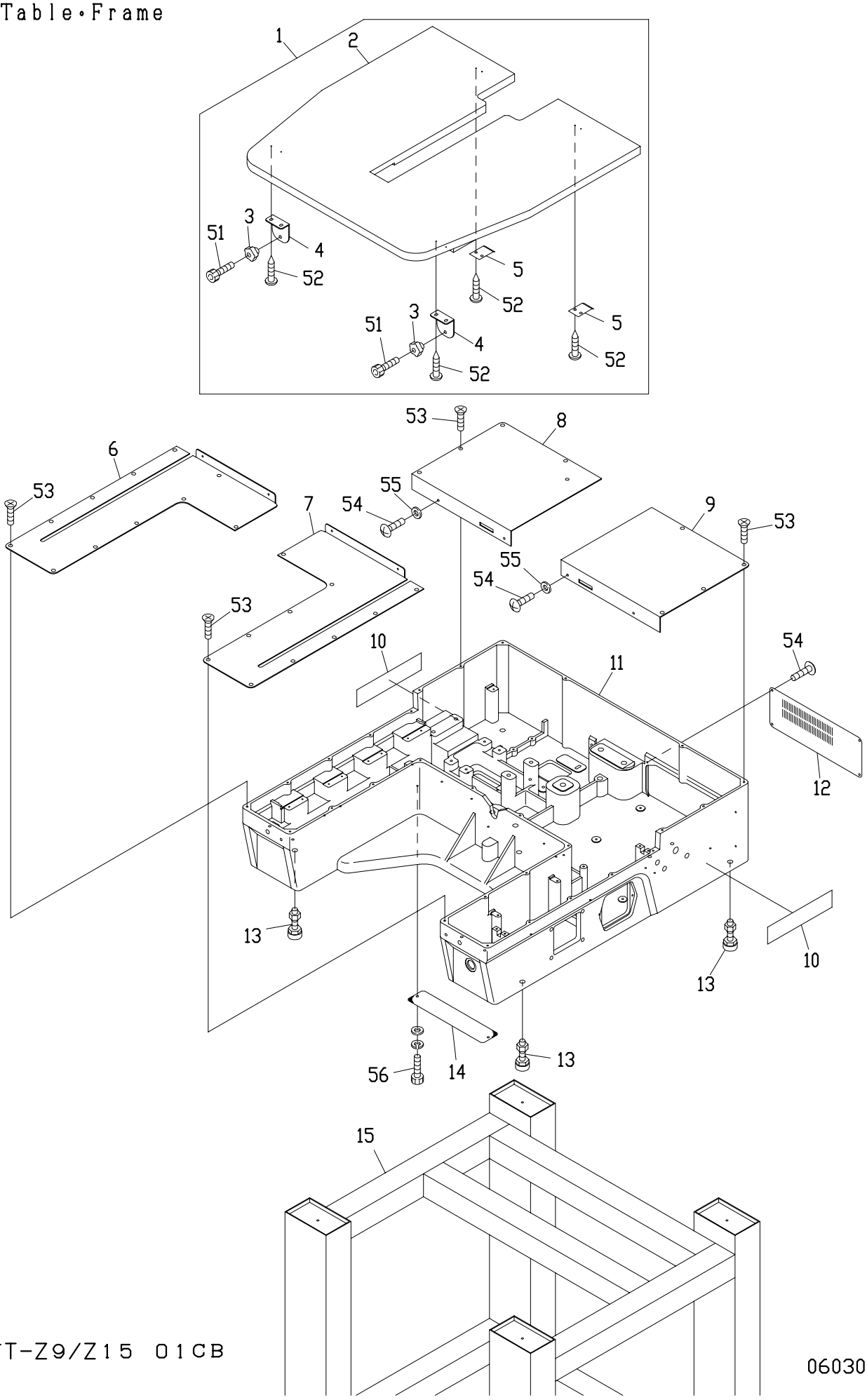

00 Table - Frame

ITEM	LIST NO.	DESCRIPTION	Q'TY	NOTE
1	ＭＫ１２００３０	Table a'ssy	1	Option
2	ＭＫ１２００４０	Table	1	
3	Ａ９０１２４３３	Star knob(Tapping hole) STK30NT	2	
4	ＭＫ１２００２０	Table set bracket	2	
5	ＭＨ１２００１０	Table support plate spring	2	
6	ＭＫ２５０２６１	H-shaft protection cover(L)	1	
7	ＭＫ２５０２５１	H-shaft protection cover(R)	1	
8	ＭＫ２５０２８０	Top cover(L)	1	
9	ＭＫ２５０２７０	Top cover(R)	1	
10	ＭＨ７９００１０	Barudan logomark seal	2	
11	ＭＫ１１００３１	Frame(DT-501)	1	
12	ＭＰ２５００００	Rear cover(VT Pro)	1	
13	Ａ９０１９０７１	Plastic foot TM-94	4	
14	ＭＫ２５００６０	Under cover	1	
15	ＭＫ１１００１０	Product table(DT-ZQ)	1	
51		Hex.socket bolt M6×30(Uni-chromate)		
52		Tapping screw φ5×16(Uni-chromate)		
53		Flush screw M4×8(Under cut)		
54		Truss screw M4×8(Black chromate)		
55		Nylon washer(φ4×φ9×t1)		
56		Hex.socket bolt M4×12(With washers)		

01A Head・Bed A

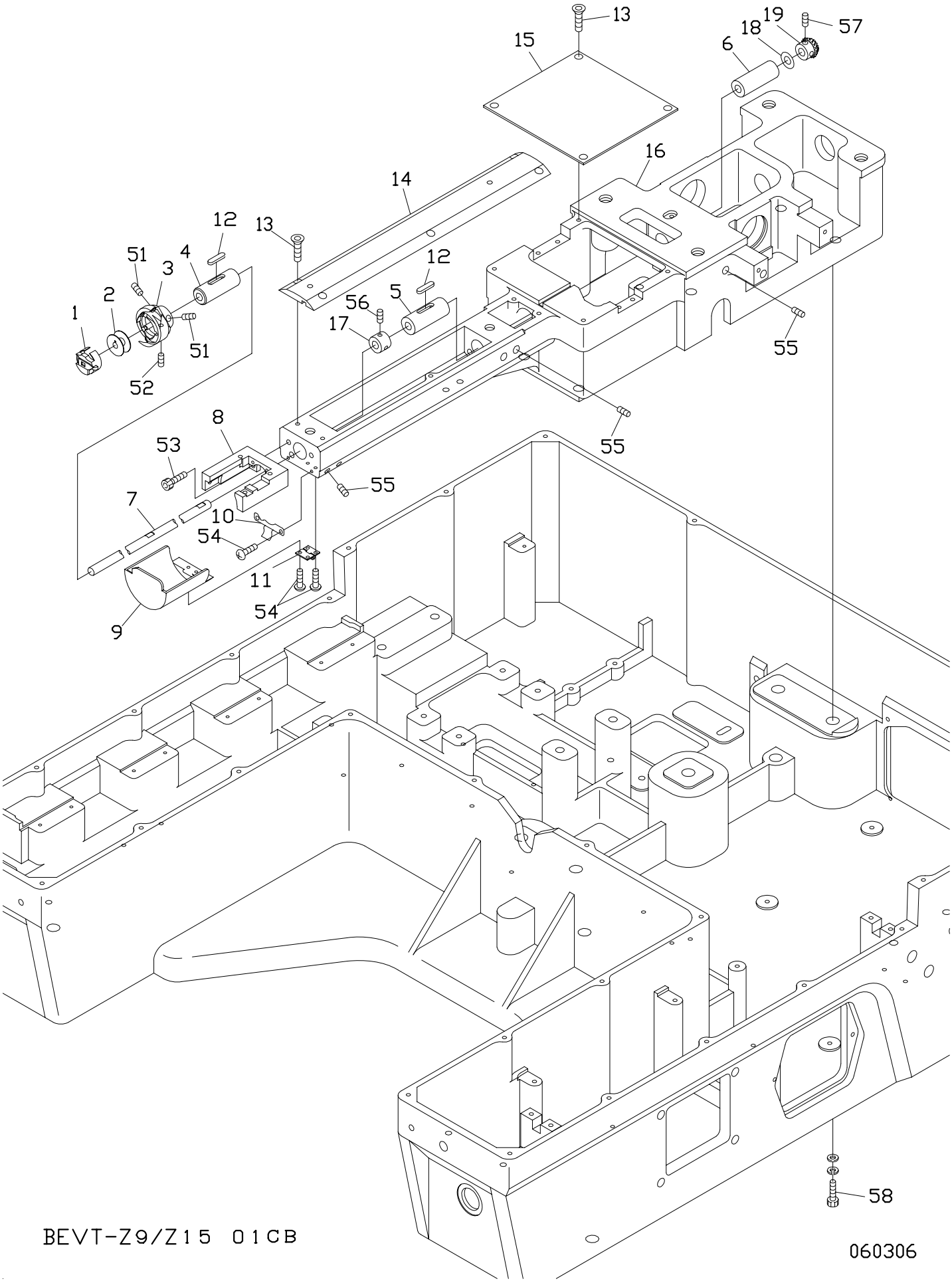

BEVT-Z9/Z15 01CB

060306

01A Head Bed A

ITEM	LIST NO.	DESCRIPTION	Q'TY	NOTE
1	ＫＦ２２１０２０	Bobbin case(4B19-S6-BA)	1	
2	ＫＦ２２０５３０	Bobbin	1	
3	ＫＦ２２０７１０	Rotating hook complete KHS12-RYPBNW	1	
4	ＫＦ２２０２４０	Lower shaft metal(upper)	1	
5	ＫＦ２２０２３０	Lower shaft metal(front)	1	
6	ＨＳ２２００１０	Lower shaft metal(Cylinder back side)	1	
7	ＭＫ２２００００	Lower shaft(DT-ZQ)	1	
8	ＭＫ２１００４０	Throat plate base(Correspond barrel frame)	1	
9	ＨＳ２１００３１	Barrel bed cover(Short type)	1	
10	ＫＣ２５０４８２	Barrel bed cover hold spring	1	
11	Ａ９０１２０２７	Hinge(TH-TN-72)	1	
12	ＫＬ２２０１４０	Oil felt C	2	
13	ＫＸ２５００８０	Needle plate set screw(Hex.socket)	9	
14	ＭＫ２５００００	Cylinder bed cover(DT-501)	1	
15	ＬＡ２５００４０	Multi cylinder bed cover A	1	
16	ＭＫ２１００３１	Cylinder bed(DT-501) KOREA	1	
17	ＫＦ２２０２９０	Lower shaft collar	1	
18	ＨＴ２２００６１	Thrust washer(Lower shaft)	1	
19	ＳＪ２２００１０	Lower shaft connecting gear(Small gear) KOREA	1	
51		Screw(SM11/64 40×5)		
52		Set screw(SM11/64 40×5)		
53		Hex.socket bolt M5×15		
54		Pan screw M3×5		
55		Hex.socket set screw M6×8(Flat point)		
56		Hex.socket set screw SM1/4 40×4		
57		Hex.socket set screw M5×6		
58		Hex.socket bolt M10×40(With washers)		

01B Head・Bed B

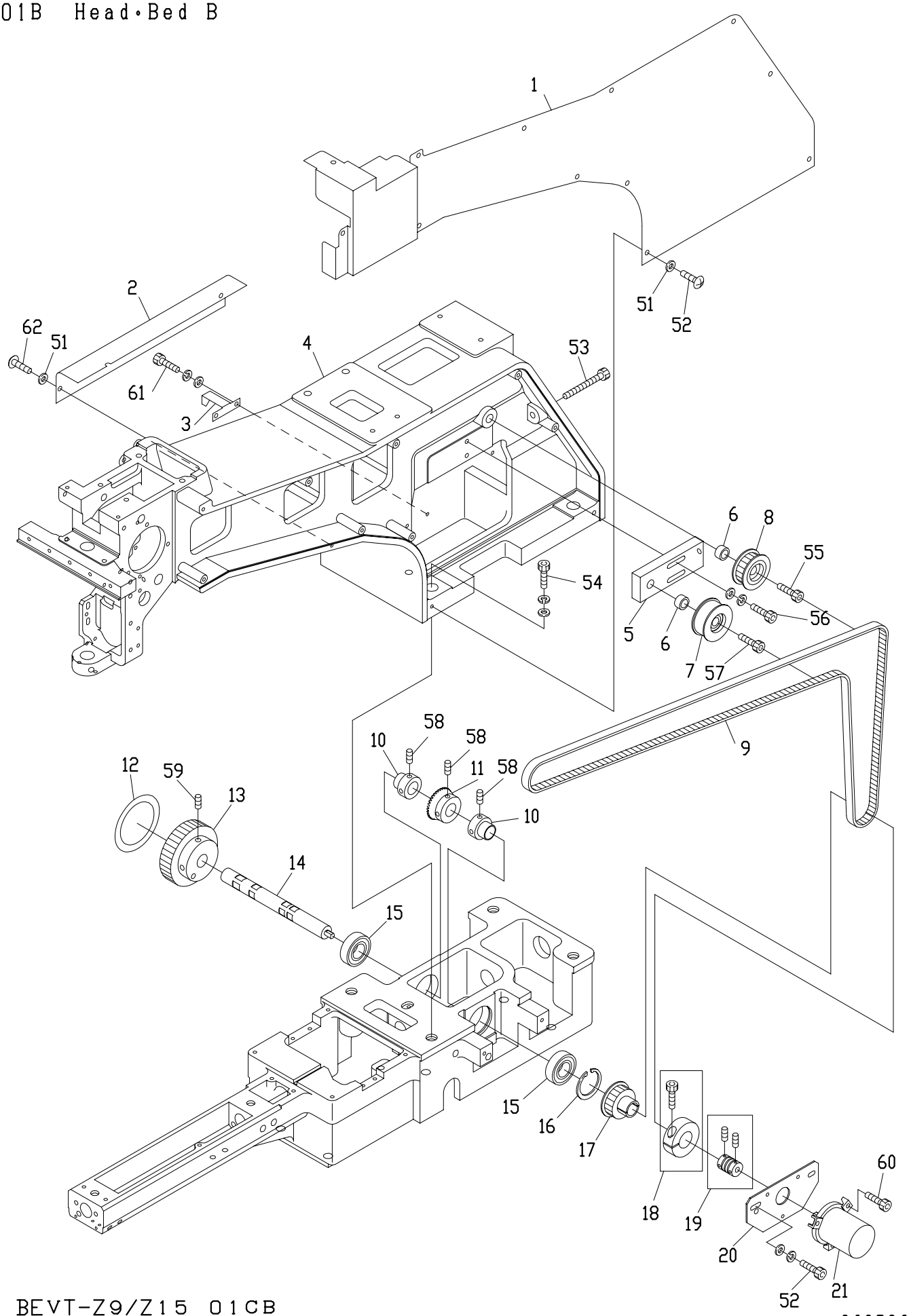

BEVT-Z9/Z15 01CB

060306

01B Head Bed B

ITEM	LIST NO.	DESCRIPTION	Q'TY	NOTE
1	ＭＫ２５０１３１	Arm cover	1	
2	ＭＫ２５０１９０	Service cover	1	
3	ＭＫ３１００１０	Point needle	1	
4	ＭＫ２１００２１	Arm(DT-501) KOREA	1	
5	ＭＫ３１００２０	Idler base	1	
6	ＭＫ３１００３０	Collar	2	
7	Ａ９０２０２１０	Idler(TPBSN 38-15)	1	
8	ＭＨ３１００９１	Synchronous idler pulley	1	
9	Ａ９０２０２１７	Timing belt(B100S5M1500)	1	
10	ＭＫ３２０００１	Lower shaft connecting shaft collar (Ball type)	2	
11	ＳＪ３２００１０	Lower shaft connecting gear(Large gear) KOREA	1	
12	ＭＫ７９００００	Rotary angle label	1	
13	ＭＫ３１００７１	Main shaft motor drive shaft(P44)	1	
14	ＭＫ３１００６０	Main shaft motor timing shaft	1	
15	Ａ９０１０００４	Bearing 6003ZZ	2	
16	Ａ９０１２４３９	C-ring for hole φ35	1	
17	ＭＫ２３０００１	Needle shaft drive pulley	1	
18	ＨＨ４８１９８０	φ19 clamp	1	
19	Ａ９０１３０７１	Coupling(MCJ16-6-6)	1	
20	ＭＨ３１００１１	Encoder bracket	1	
21	ＭＦ５１００００	Encoder(With circle bracket) (TS5307N510)	1	
51		Nylon washer(φ4×φ9×t1)		
52		Hex.socket bolt M4×12(With washers)		
53		Hex.socket bolt M6×80		
54		Hex.socket bolt M12×60(With washers)		
55		Hex.socket bolt M10×30		
56		Hex.socket bolt M5×25(With washers)		
57		Hex.socket bolt M10×25		
58		Hex.socket set screw M5×8		
59		Hex.socket set screw M6×8		
60		Hex.socket bolt M4×12		
61		Hex.socket bolt M4×10(With washers)		
62		Trass screw M4×8		

02A Thread cut A

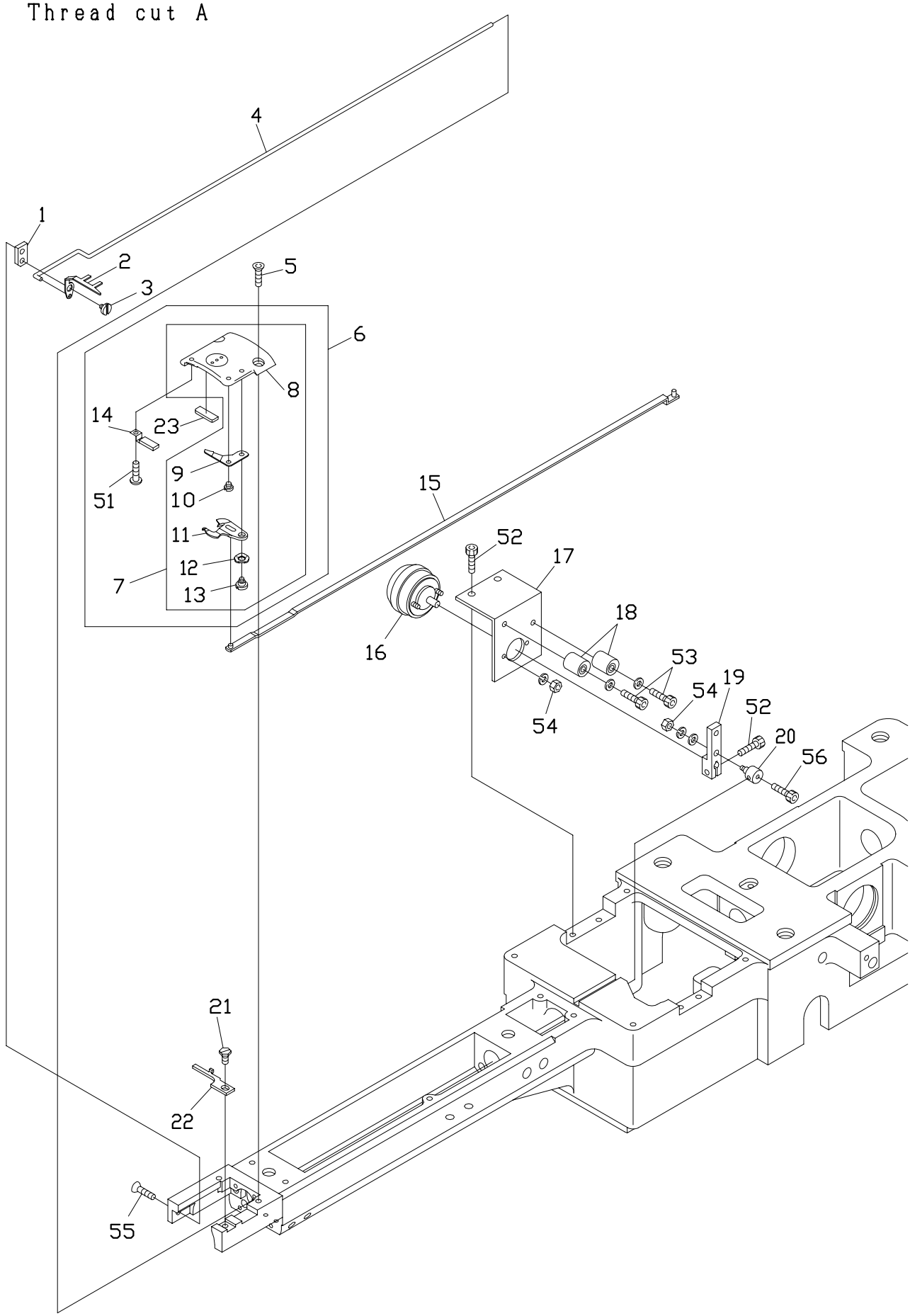

BEVT-Z9/Z15 01CB

060306

02A Thread cut A

ITEM	LIST NO.	DESCRIPTION	Q'TY	NOTE
1	ＨＳ２１００５１	Hook fixed stay(Short type)	1	
2	ＨＳ２１０３００	Hook(Cylinder MK5)	1	
3	ＫＣ２７１００１	Upper thread knife rotary shaft	1	
4	ＭＫ２７００１０	Hook drive rod(L)	1	
5	ＫＸ２５００８０	Throat plate set screw(Hex.socket)	2	
6	ＳＪ２７０１２０	Throat plate a'ssy	1	
7	ＳＪ２７００１０	Throat plate a'ssy (Barrel frame correspondence)	1	
8	ＳＪ２７００２０	Cylinder throat plate Barrel frame correspondence	1	
9	ＳＪ２７００４０	Fixed knife barrel frame correspondence	1	
10	ＫＸ２７００１０	Fixed knife set screw	1	
11	ＳＪ２７００３０	Driving knife barrel frame correspondence	1	
12	Ａ９０１３０６６	Wave washer(WW5)(SK)	1	
13	ＫＮ２７２０１０	Lower thread knife rotary shaft	1	
14	ＨＴ２７０１８１	Lower thread support stay(Cylinder) CMP	1	
15	ＭＫ２７００００	Lower thread knife drive rod(L)	1	
16	Ａ９０５６０４０	Rotary solenoid 3ER25-30×3×8×9 (24V)	1	
17	ＬＡ２７００４０	Solenoid stay	1	
18	ＫＮ２７２４０１	Stopper eccentric	2	
19	ＫＣ２７１９４０	Solenoid lever A	1	
20 21	ＨＳ２１００８０ ＫＸ２７０４３０	Connecting clamp Screw(Cylinder)	1 1	
22	ＫＸ２７００００	Rotating hook bobbin case holder position bracket	1	
23	ＳＪ２７０１１０	Lower thread support magic tape (Cylinder)		
51		Pan screw M3×3		
52		Hex.socket bolt M4×10		
53		Hex.socket bolt M4×20		
54		Hex.nut M3		
55		Hex.socket flush bolt M4×6		
56		Hex.socket bolt M3×5		

02B Thread cut B

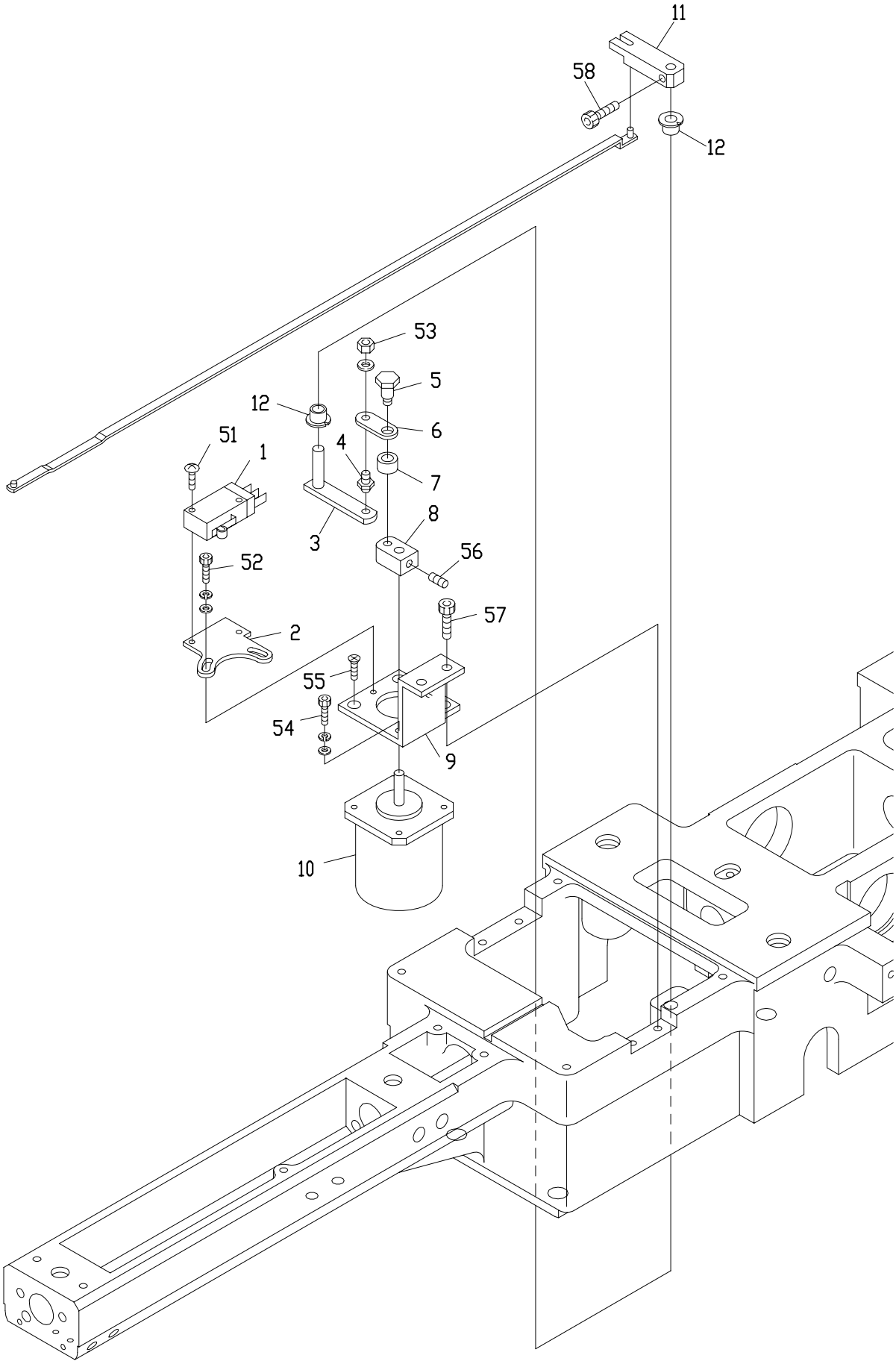

BEVT-Z9/Z15 01CB

060306

02B Thread cut B

ITEM	LIST NO.	DESCRIPTION	Q'TY	NOTE
1	A9052078	Micro switch D2VW-01L2A-1	1	
2	MF210080	Sensor bracket	1	
3	MF210070	Lower thread knife drive lever lower	1	
4	MB295250	Lever pin	1	
5	MB295290	Lever set pin	1	
6	MB295270	Lever connection plate	1	
7	MB295260	Motor lever collar	1	
8	MG210070	Motor lever(Long)	1	
9	MG210050	Thread cutter motor bracket(Long)	1	
10	MF510020	Color change thread cutter motor	1	
11	KC271120	Lower thread knife driving lever(Upper)	1	
12	A9012114	DU bush with flange(MB0505-10FDU)	2	
51		Trass screw M3×15		
52		Hex.socket bolt M3×6		
53		Hex.nut M4 Ⅲ		
54		Hex.socket bolt M3×8		
55		Flush screw M3×8		
56		Hex.socket set screw M4×5		
57		Hex.socket bolt M4×10		
58		Hex.socket bolt M4×6		

02C Thread cut C

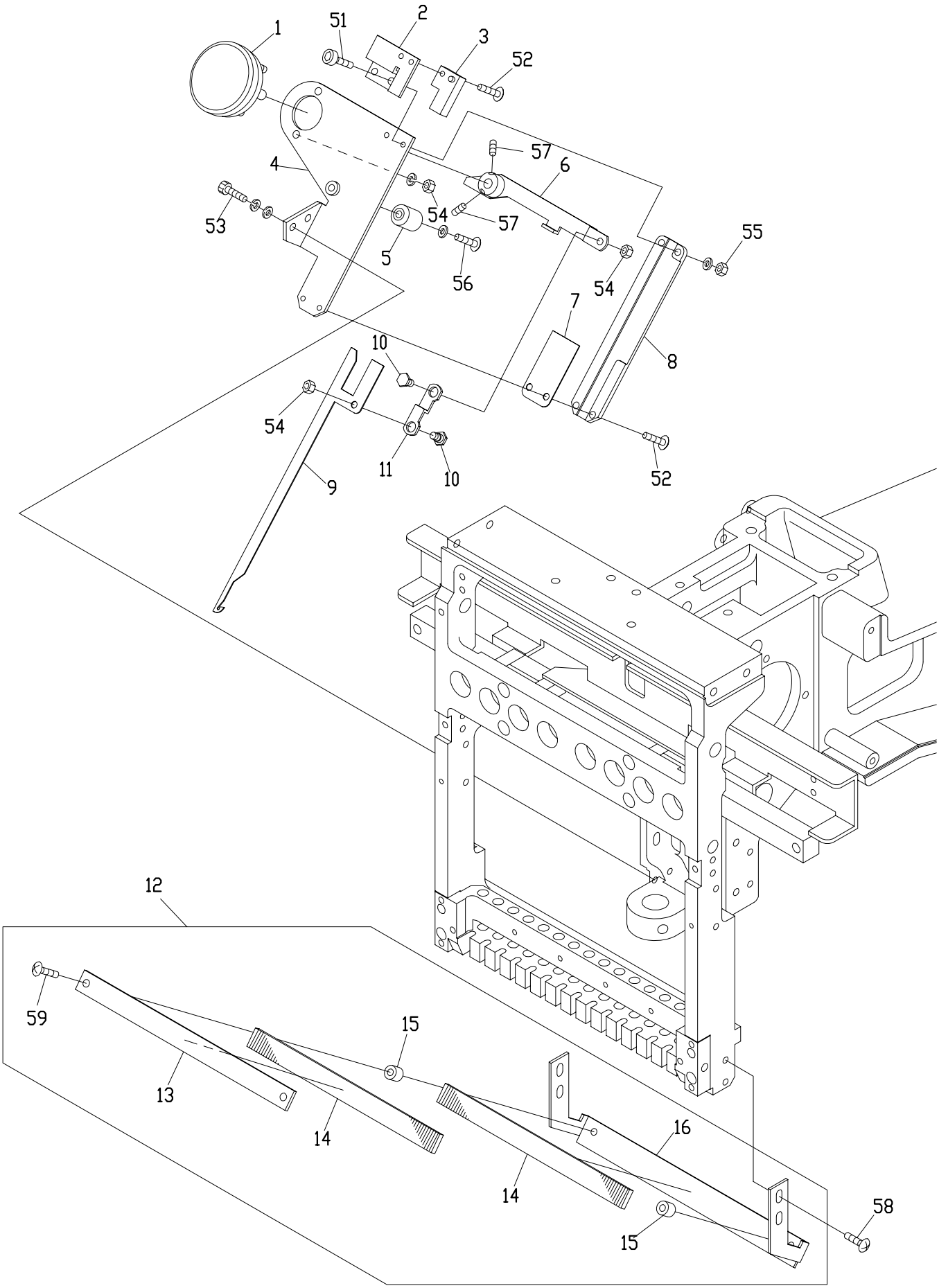

BEVT-Z9/Z15 01CA/B

060306

02C　Thread Cut C

ITEM	LIST NO.	DESCRIPTION	Q'TY	NOTE
1	Ａ９０５６０４１	Rotary solenoid 4ER45-28×3×8×9 (24V)	1	
2	ＫＬ２７０２６０	Switch stay	1	
3	Ａ９０５２０２８	Proximity switch(RS-603)	1	
4	ＳＧ２７００８１	Thread away base	1	
5	ＫＮ２７２４０１	Stopper eccentric	1	
6	ＳＧ２７００９０	Thread away solenoid lever	1	
7	ＫＬ２７０４５０	Hook guide plate	1	
8	ＫＬ２７００９１	Thread away hook guide	1	
9	ＫＬ２７０１０１	Thread away hook	1	
10	ＫＬ２７０１３１	Lever connecting pin	2	
11	ＫＬ２７０１２０	Connecting plate	1	
12	ＬＡ２７０１５０	Thread guard disk A'ssy(ZN-A)	1	ZN
	ＬＡ２７０１６０	Thread guard disk A'ssy(ZQ-A)	1	ZQ
13	ＭＮ２７０１５０	Thread guard disk bracket upper	1	Z3
	ＫＸ２７００５０	Thread guard disk bracket upper	1	Z9
	ＳＧ２７００４０	Thread guard disk bracket upper	1	Z12
	ＲＤ２７００４０	Thread guard disk bracket upper	1	Z15
14	ＭＮ２７０１６０	Napped plate	2	Z3
	ＫＸ２７０３７０	Napped plate	2	Z9
	ＳＧ２７０１００	Napped plate	2	Z12
	ＲＤ２７００２０	Napped plate	2	Z15
15	ＫＸ２７００７０	Thread guard disk spacer	2	
16	ＭＮ２７０１４０	Thread guard disk bracket(DT-Z3)	1	Z3
	ＬＡ２７０１２０	Thread guard disk bracket(ZN-A)	1	Z9
	ＳＧ２７００３０	Thread guard disk bracket(Z12)	1	Z12
	ＬＡ２７００８０	Thread guard disk bracket(ZQ-A)	1	Z15
51		Hex.socket bolt M3×10		
52		Truss screw M3×6		
53		Hex.socket bolt M4×12(With washers)		
54		Hex.nut M4(Ⅲ)		
55		Hex.nut M4(Ⅲ)(With washer)		
56		Truss screw M4×20		
57		Hex.socket set screw M4×5		
58		Truss screw M4×8		
59		Truss screw M4×12		

03 Take up level

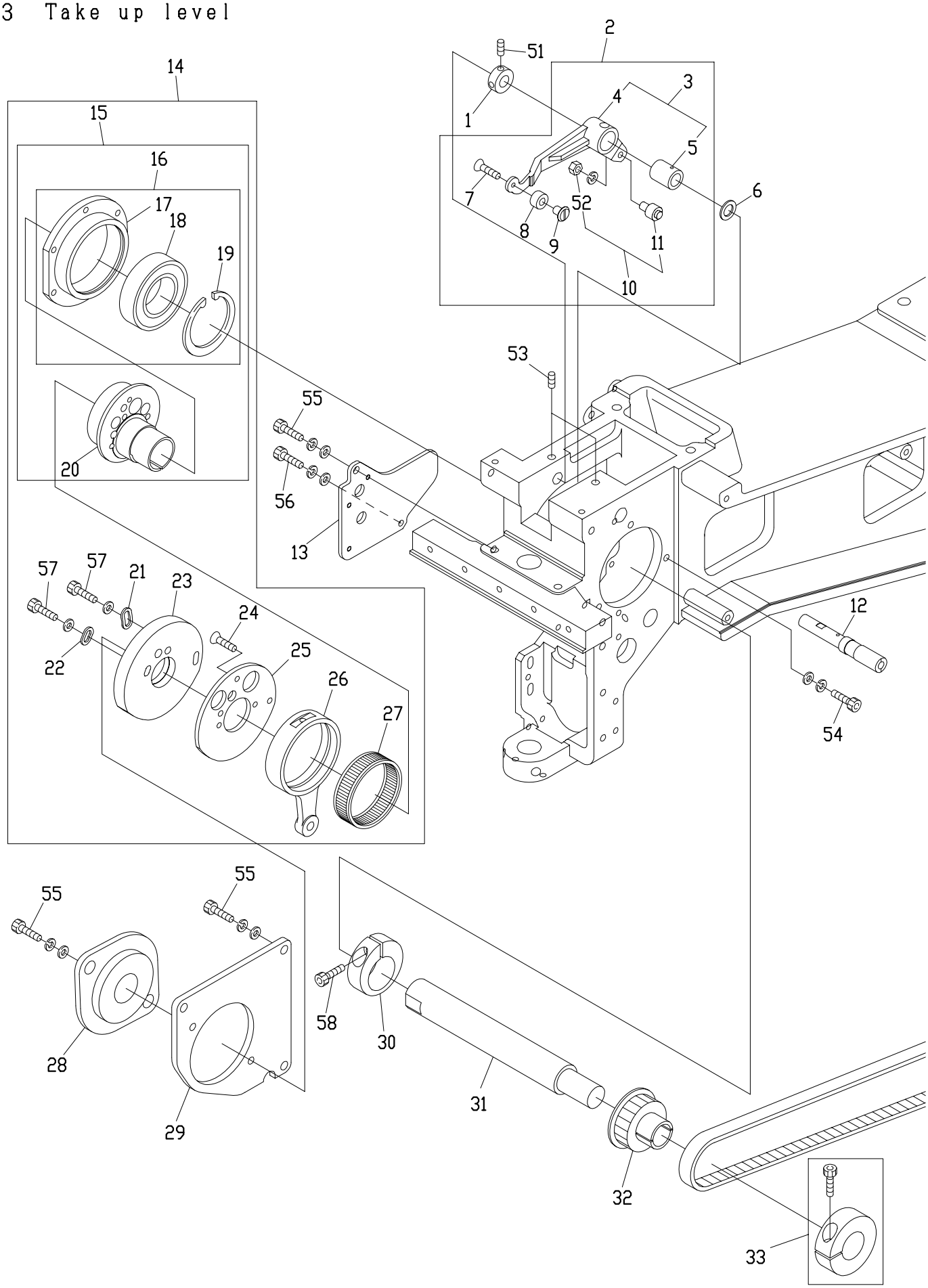

BEVT-Z9/Z15 01CB

060306

03 Take up lever

ITEM	LIST NO.	DESCRIPTION	Q'TY	NOTE
1	ＨＢ２３０８００	Take up lever driving lever fixing pin set collar	1	
2	ＭＫ２３０１３０	Take up lever driving lever a'ssy	1	
3	ＲＨ２３０８０１	Take up lever driving lever(Metal)	1	
4	ＲＨ２３０３１１	Take up lever driving lever	1	
5	ＲＨ２３０８１０	Take up lever metal	1	
6	ＲＨ２３０６１０	Thrust washer	1	
7	ＨＢ２３０６５０	Flush screw(With adhesion)	1	
8	ＭＫ２３０１２０	Take up lever driving roller (ELITE pro)	1	
9	ＲＤ２３０１３０	Take up lever driving roller shaft	1	
10	ＫＦ２３０５０１	Take up lever roller a'ssy	1	
11	ＫＦ２３０６８０	Cam followers(KR×4×7.9×15-1P×1)	1	
12	ＲＨ２３０３２０	Take up lever driving lever fixing pin	1	
13	ＭＫ３１００４１	Cap cover fixed plate	1	
14	ＲＲ２３０２５０	Take up lever･Needle bar drive a'ssy	1	
15	ＲＮ２３００１０	Needle bar driving cam a'ssy	1	
16	ＲＮ２３００３０	Bearing case a'ssy	1	
17	ＲＮ２３００４０	Bearing case	1	
18	Ａ９０１００７３	Ball bearing(6005ZZ)	1	
19	Ａ９０１２４２１	C-ring for hole φ47	1	
20	ＲＮ２３００２０	Needle bar driving cam (Eccentricity 9.2 φ20)	1	
21	ＨＢ２３００８０	Washer for cam(2)	1	
22	ＨＢ２３００７０	Washer for cam(1)	1	
23	ＲＲ２３０２４０	Take up lever cam H6S(Φ20)	1	
24	ＨＢ２３０６２０	Flush screw	3	
25	ＲＨ２３０３００	Take up lever cam base	1	
26	ＲＨ２３０２８０	Needle bar crank rod	1	
27	ＲＨ２３０２７１	Needle bearing (HL-8E-K42x46x12.8x2)	1	
28	Ａ９０１１２５１	Frange unit(SBPFL 204)	1	
29	ＭＫ３１００５０	Bearing plate	1	
30	ＲＨ２３０３３０	Needle bar driving cam set collar	1	
31	ＭＫ２２００１０	Upper shaft	1	
32	ＭＫ２３０００１	Needle shaft drive pulley(P22)	1	
33	ＨＨ４８１９８０	φ19 clamp	1	
51		Hex.socket set screw M4×4(With adhesion)		
52		Hex.nut M4(With spring washer)		
53		Hex.socket set screw M5×5		
54		Hex.socket bolt M4×15(With washers)		
55		Hex.socket bolt M5×15(With washers)		
56		Hex.socket bolt M4×12(With washers)		
57		Hex.socket bolt M4×8		
58		Hex.socket bolt M5×18		

04A-1 Needle bar A(Z9)

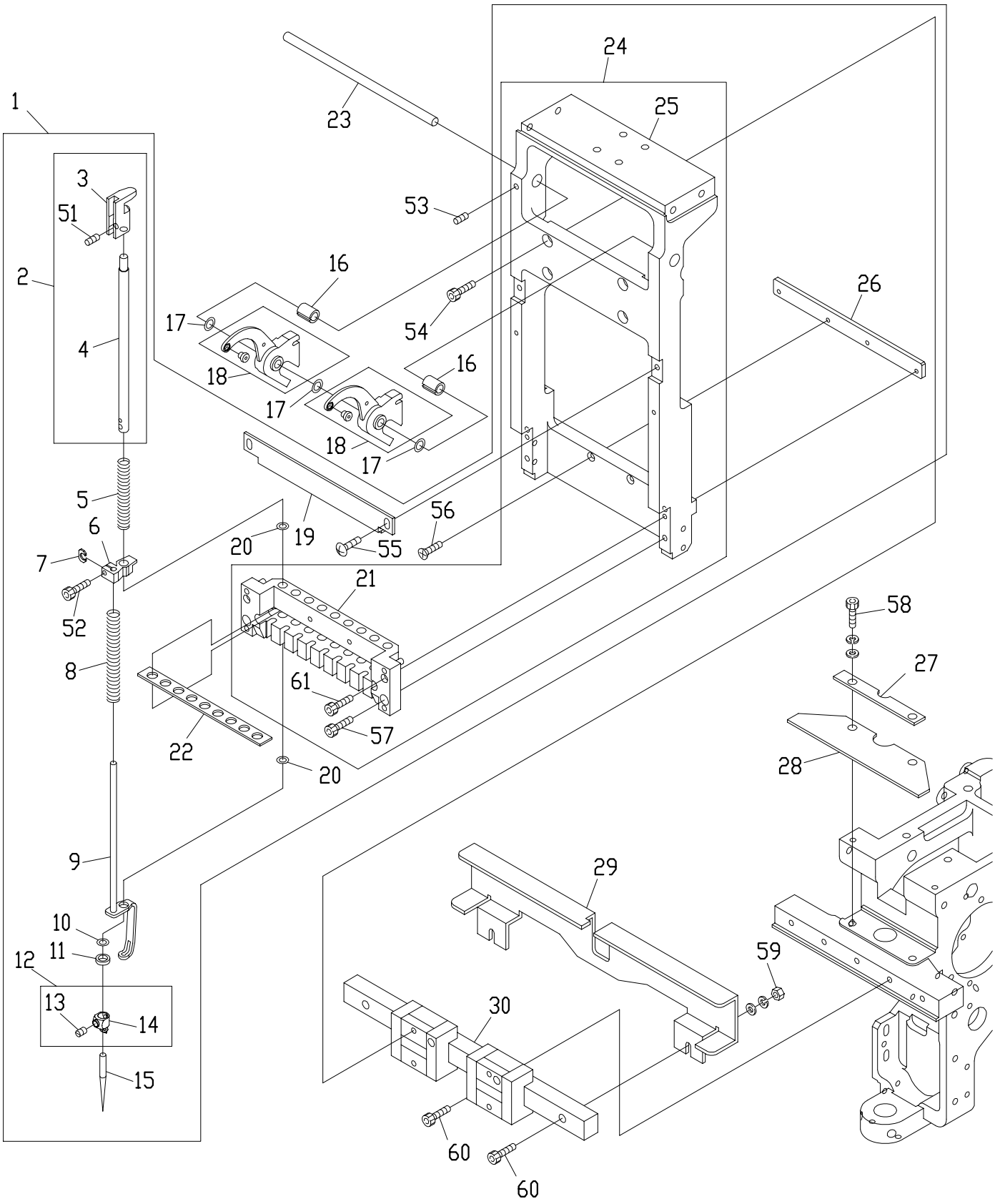

04A-1 Needle bar A (Z9)

ITEM	LIST NO.	DESCRIPTION	Q'TY	NOTE
1	/	/		
2	RD230480	Needle bar a'ssy	9	
3	RD230490	Needle bar guide	9	
4	RH230410	Needle bar	9	
5	HT230251	Needle bar spring(Upper,for thick type)	9	
6	HT230330	Cloth hold set clamp	9	
7	HT230263	Washer for set clamp	9	
8	SG230220	Needle bar spring lower	9	
9	RD230370	Cloth hold(ZQ4)	9	
10	KF230910	O-ring(AN6227-5)	9	
11	HT230120	Washer 2.4	9	
12	RH230440	Needle clamp(With hook,set screw)	9	
13	RH230460	Needle clamp screw	9	
14	RH230450	Needle clamp(With hook)	9	
15	FN070011Q1	Needle(DBXK5Q1-NY11)	9	
16	MK230090	Take up lever collar(14L)	2	
17	MK230050	Take up lever washer	10	
18	MK230040	Take up lever	9	
19	MH230110	Needle bar stocker(DT-ZN)	1	
20	A9014167	O-ring SS065	18	
21	MH230031	Needle bar base(DT-ZN)	1	
22	MH230100	Needle bar felt(DT-ZN)	1	
23	MH230040	Take up lever shaft (DT-ZN)	1	
24	SW230000	Slide block set	1	
25	MH230022	Slide block(DT-ZN)	1	
26	KX230040	Bearing plate	1	
27	MK230020	Holder plate	1	
28	MK230010	LM rail holder plate	1	
29	MK230110	Take up lever stocker(DT-ZN)	1	
30	A9011248	LM Guide (SSR15XV2UUE+220LYF)	1	
51		Hex.socket double point screw M4×4		
52		Hex.socket bolt M3×8		
53		Hex.socket set screw M4×8		
54		Hex.socket bolt M4×10		
55		Hex.socket button bolt M4×8		
56		Hex.socket flush screw M3×14		
57		Hex.socket bolt M4×12		
58		Hex.socket bolt M5×15(With washers)		
59		Hex.nut M4		
60		Hex.socket bolt M4×15		
61		Hex.socket bolt M3×35		

04A-2 Needle bar (Z15)

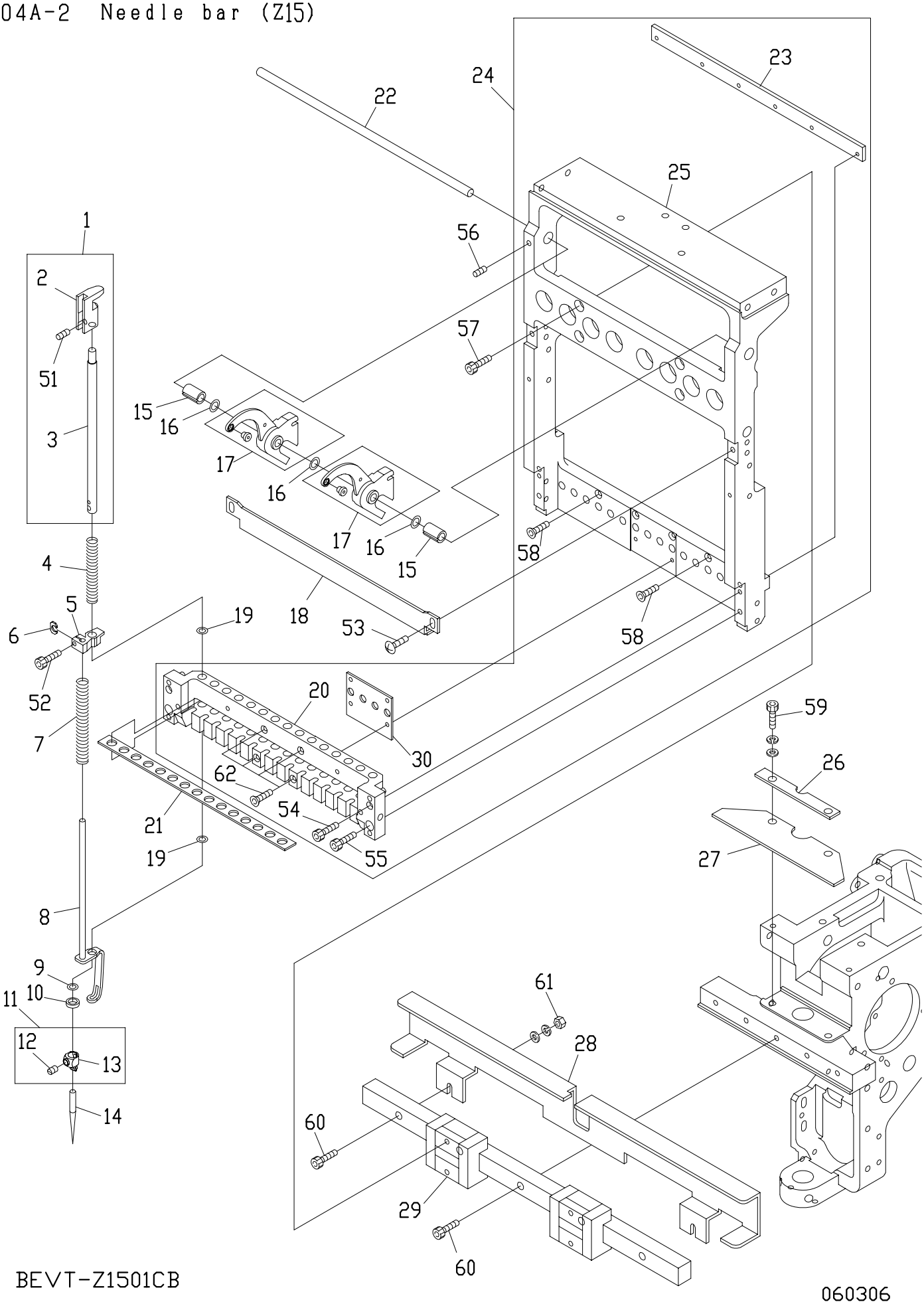

BEVT-Z1501CB

060306

04A-2 Needle bar A (Z15)

ITEM	LIST NO.	DESCRIPTION	Q'TY	NOTE
1	ＲＤ２３０４８０	Needle bar a'ssy	１５	
2	ＲＤ２３０４９０	Needle bar guide	１５	
3	ＲＨ２３０４１０	Needle bar	１５	
4	ＨＴ２３０２５１	Needle bar spring(Upper)	１５	
5	ＨＴ２３０３３０	Cloth hold set clamp	１５	
6	ＨＴ２３０２６３	Washer for set clamp	１５	
7	ＳＧ２３０２２０	Needle bar spring lower	１５	
8	ＲＤ２３０３７０	Cloth hold(ZQ4)	１５	
9	ＫＦ２３０９１０	O-ring(AN6227-5)	１５	
10	ＨＴ２３０１２０	Washer 2.4	１５	
11	ＲＨ２３０４４０	Needle clamp(With hook,set screw)	１５	
12	ＲＨ２３０４６０	Needle clamp screw	１５	
13	ＲＨ２３０４５０	Needle clamp(With hook)	１５	
14	FN070011Q1	Needle(DBXK5Q1-NY11)	１５	
15	ＭＫ２３００９０	Take up lever collar(14L)	２	
16	ＭＫ２３００５０	Take up lever washer	１６	
17	ＭＫ２３００４０	Take up lever	１５	
18	ＳＬ２３００４０	Needle bar stocker	１	
19	Ａ９０１４１６７	O-ring SS065	３０	
20	ＳＬ２３００３１	Needle bar base	１	
21	ＳＬ２３００８０	Needle bar felt	１	
22	ＳＬ２３００７０	Take up lever shaft(ZQ6)	１	
23	ＲＤ２３００６０	Bearing plate	１	
24	ＳＬ２３０００１	Slide block set	１	
25	ＳＬ２３００２１	Slide block	１	
26	ＭＫ２３００２０	Holder plate	１	
27	ＭＫ２３００１０	LM rail holder plate	１	
28	ＭＫ２３０１００	Take up lever stocker	１	
29	ＳＬ２３０１４０	LMｶﾞｲﾄﾞ(ZQ6)SSR15V2LL+311L-1	１	
30	ＳＬ２３００９０	Slide block sim	１	
51		Hex.socket double point screw M4×4		
52		Hex.socket bolt M3×8		
53		Hex.socket button bolt M4×8		
54		Hex.socket bolt M3×35		
55		Hex.socket bolt M4×12		
56		Hex.socket set screw M4×8		
57		Hex.socket bolt M4×10		
58		Hex.socket flush bolt M3×14		
59		Hex.socket bolt M5×15(With washers)		
60		Hex.socket bolt M4×15		
61		Hex.nut M4		
62		Hex.socket bolt M3×25		

04B Needle bar B

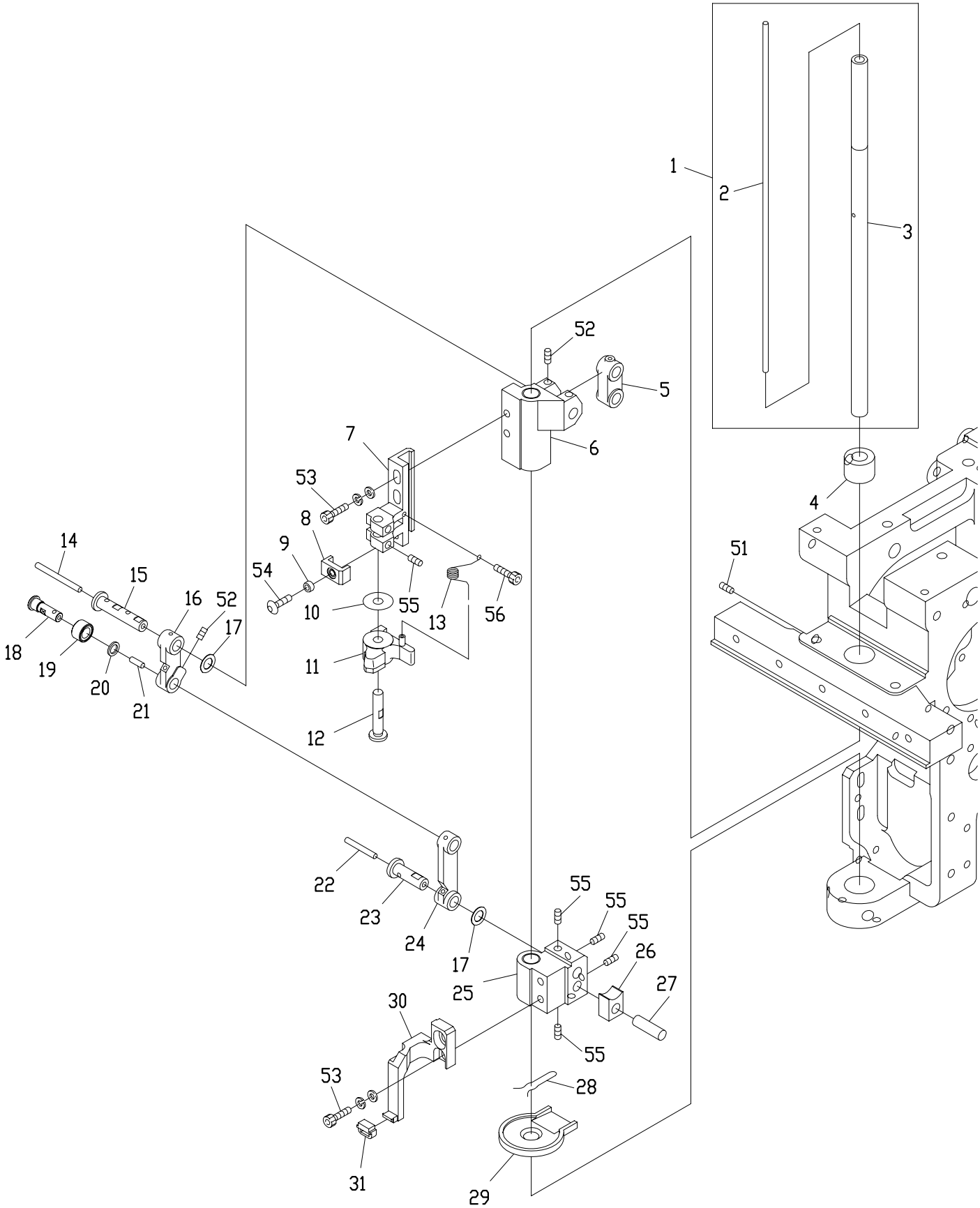

04B Needle bar B

ITEM	LIST NO.	DESCRIPTION	Q'TY	NOTE
1	MH230140	Slide shaft a'ssy(DT-ZN)	1	
2	MH230180	Oil core(210mm)	1	
3	MH230170	Slide shaft(DT-ZN)	1	
4	KX230071	Slide shaft bush(Upper)	1	
5	HB230200	Needle bar driving link	1	
6	HT230510	Needle bar driver slide block	1	
7	HT230290	Needle bar beat fixing base	1	
8	HT230520	Needle bar driving stopper	1	
9	A9012368	Spacer(Roll bush)	1	
10	RH230550	Shim ring	1	
11	RH230540	Needle bar driver	1	
12	HT230280	Needle bar driver pin	1	
13	HT230560	Needle bar driver return spring	1	
14	HT230750	Oil core(30mm)	1	
15	HT230471	Small link pin	1	
16	HT230491	Link(Small)	1	
17	HT230730	Shim ring(φ10 t=0.3)	2	
18	RR230130	Link roller joint pin	1	
19	RR230150	Cloth hold roller	1	
20	RR230140	Washer	1	
21	HT230760	Oil core(8mm)	1	
22	HT230770	Oil core(20mm)	1	
23	HT230460	Large link pin	1	
24	HT230480	Link(Large)	1	
25	HT230500	Set slide block	1	
26	HP231370	Square ball	1	
27	HT230320	Square ball pin	1	
28	MH230200	Grip spring	1	
29	SG230000	Oil receive plate	1	
30	RV230250	Cloth hold support	1	
31	HT230340	Cloth hold support rubber	1	
51		Hex.socket set screw M5×10		
52		Hex.socket set screw M4×6(With nylon)		
53		Hex.socket bolt M4×12(With washers)		
54		Hex.socket button bolt M3×6		
55		Hex.socket set screw M4×4(With nylon)		
56		Hex.Socket bolt M2.5×6		

04C Needle bar C

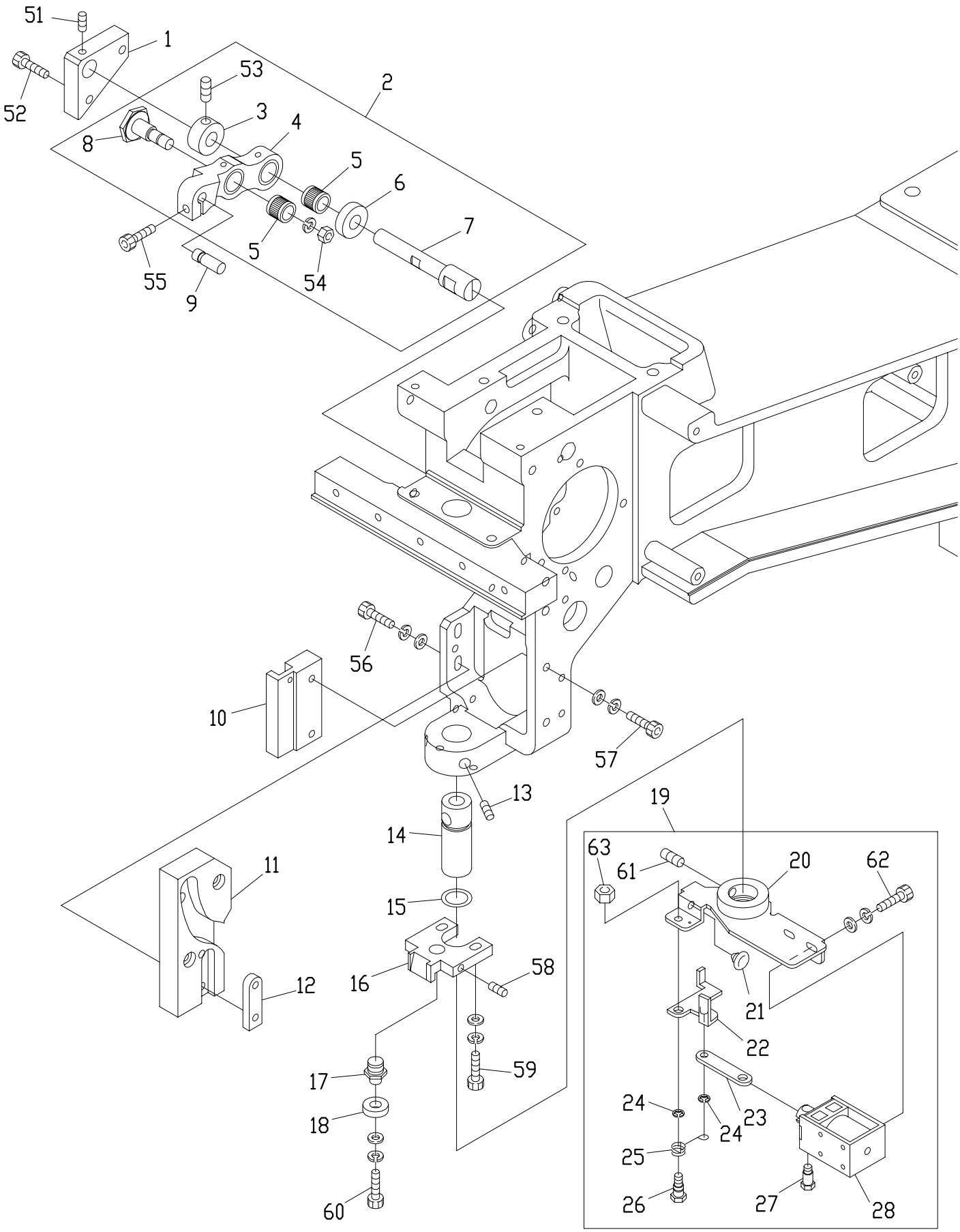

BEVT-Z9/Z1501CB

040510

04C Needle bar C

ITEM	LIST NO.	DESCRIPTION	Q'TY	NOTE
1	ＭＨ２３０１５０	Lever pin block(515 white)	1	
2	ＲＲ２３００９０	Needle bar driving lever set(P25.65)	1	
3	ＨＢ２３０２７１	Needle bar driving lever fixing pin set collar	1 1	
4	ＲＲ２３００８０	Needle bar driving lever(P25.65)	1	
5	ＨＢ２３０３６１	Needle roller with retainer(KV8×11×10SV2)	2	
6	ＨＢ２３０２８１	Needle bar driving lever fixing pin collar	1	
7	ＨＴ２３０４１０	Needle bar driving lever fixing pin	1	
8	ＨＢ２３０２６１	Needle bar driving lever connecting pin	1	
9	ＨＢ２３０２２０	Needle bar driving lever pin(B)	1	
10	ＨＴ２３０４２０	Guide plate	1	
11	ＭＫ２３００７１	K2 cam(φ12)	1	
12	ＭＫ２３００８０	Cam tap plate	1	
13	Ａ９０１２０５３	Hex.socket set screw(With steel ball) M6×0.7×8	2	
14	ＬＡ２３００８０	Slide shaft bush(Lower)	1	
15	Ａ９０１９０３７	O-ring(Bush lower S12.5 NOK)	1	
16	ＬＡ２３０１４０	Bearing guide	1	
17	ＳＧ２３０３００	Bearing pin	1	
18	Ａ９０１００６５	Ball bearing 686zz	1	
19	ＭＭ２７００００	Thread support a'ssy(24V) DTHE-ZQ	1	
20	ＳＧ２７００５０	Thread support base	1	
21	Ａ９０１４１６６	Plug cushion rubber TM-96-6	1	
22	ＳＧ２７００６０	Thread support lever	1	
23	ＳＧ２７００７０	Thread support link	1	
24	Ａ９０１２１２７	E-ring(φ3)	2	
25	ＳＧ２７０１２０	Thread support return spring	1	
26	ＳＧ２７０１１０	Thread support lever pin screw	1	
27	ＫＣ２７０１０１	Solenoid pin	1	
28	Ａ９０５６０４２	Keep solenoid(24V) TDS-K10SL-368	1	
51		Hex.socket set screw M4×4(With nylon)		
52		Hex.socket bolt M4×12(With washers)		
53		Hex.socket set screw M5×5		
54		Hex.nut M6(With spring washer)		
55		Hex.socket bolt M4×14(With adhesive)		
56		Hex.socket bolt M4×15		
57		Hex.socket bolt M4×18(With washers)		
58		Hex.socket set screw(Dog point) M4×12		
59		Hex.socket bolt M4×15(With washers)		
60		Hex.socket bolt M4×6(With washers)		
61		Hex.socket set screw M5×8		
62		Hex.socket bolt M3×6(With washers)		
63		Hex.nut M4		

04D Needle bar D

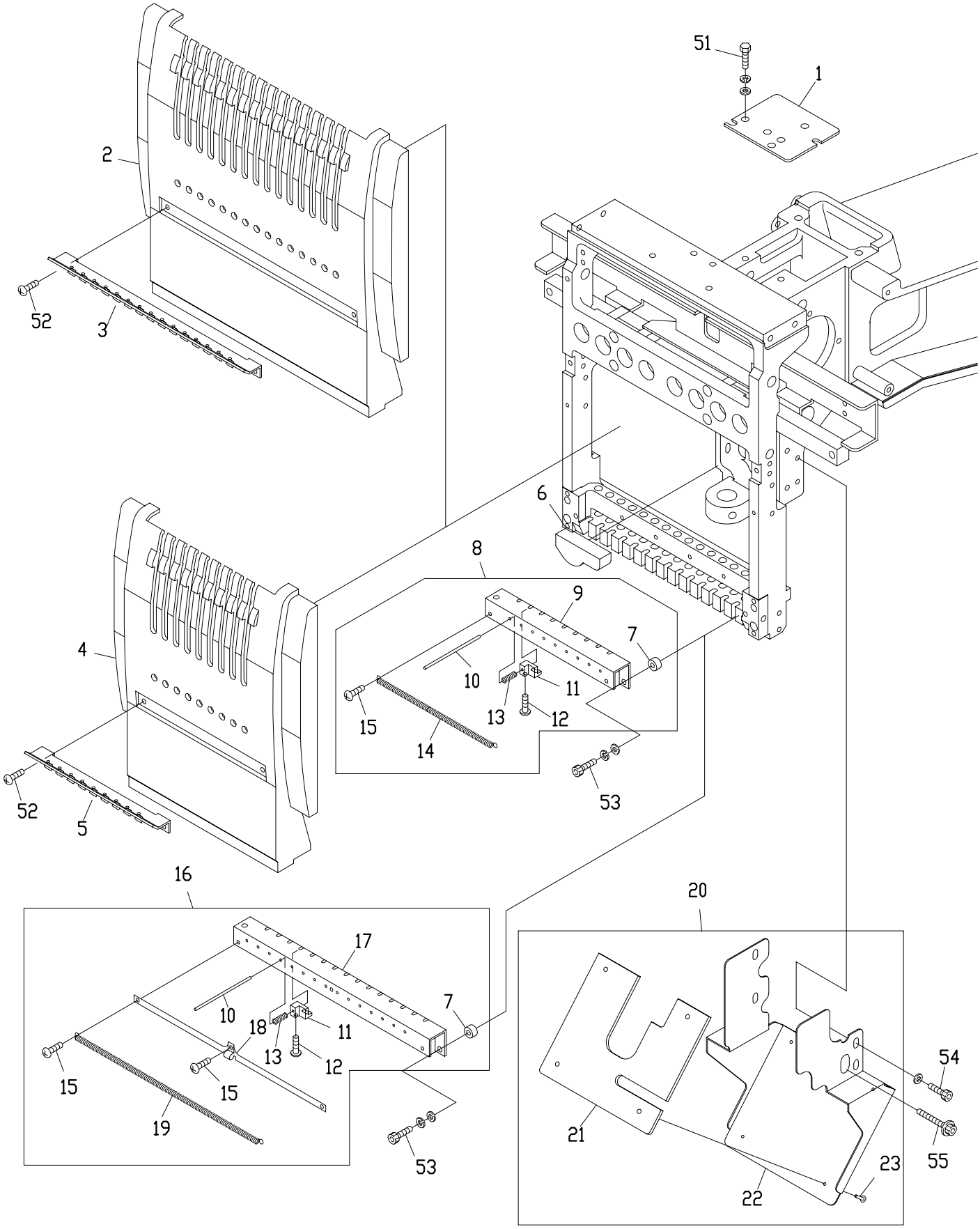

BEVT-Z9/Z1501CB

060306

04D Needle Bar D

ITEM	LIST NO.	DESCRIPTION	Q'TY	NOTE
1	RV250070	Arm upper cover	1	
2	PG250000	Head cover(Z15)	1	Z15
3	RD240271	Thread guard(With guide)	1	Z15
4	PE250000	Head cover(DT-Z9)	1	Z9
5	KX240161	Thread guard(With ceramic)	1	Z9
6	SG230280	Oil save felt	1	
7	SG270140	Thread support apron spacer	2	
8	MH270130	Thread support apron a'ssy	1	Z9
9	MH270140	Thread support apron	1	Z9
10	SG270130	Thread support pin	9	Z9
			15	Z15
11	SG270000	Thread support clamp	9	Z9
			15	Z15
12	HT270063	Thread support clamp set screw	9	Z9
		M3x6	15	Z15
13	SG270180	Thread support spring	9	Z9
			15	Z15
14	MH270150	Thread holder spring	1	Z9
15	SL270040	Thread holder spring fixed screw	2	Z9
			3	Z15
16	SL270000	Thread support apron a'ssy	1	Z15
17	SL270010	Thread support apron	1	Z15
18	SL270030	Thread holder spring support	1	Z15
19	SL270020	Thread holder spring	1	Z15
20	MK250220	Cap cover set(DT-501)	1	
21	SG250060	Oil holder felt	1	
22	SG250230	Cap cover set	1	
23	A9014168	Brass rivet φ2×11.5(Brass)	4	
51		Hex.bolt M5×8 (with washers)		
52		Pan screw M3×8		
53		Hex.socket bolt M4×15 (with washers)		
54		Hex.socket bolt M4×6(With plain washer)		
55		Hex.socket flange bolt M4×25		

05 Jump

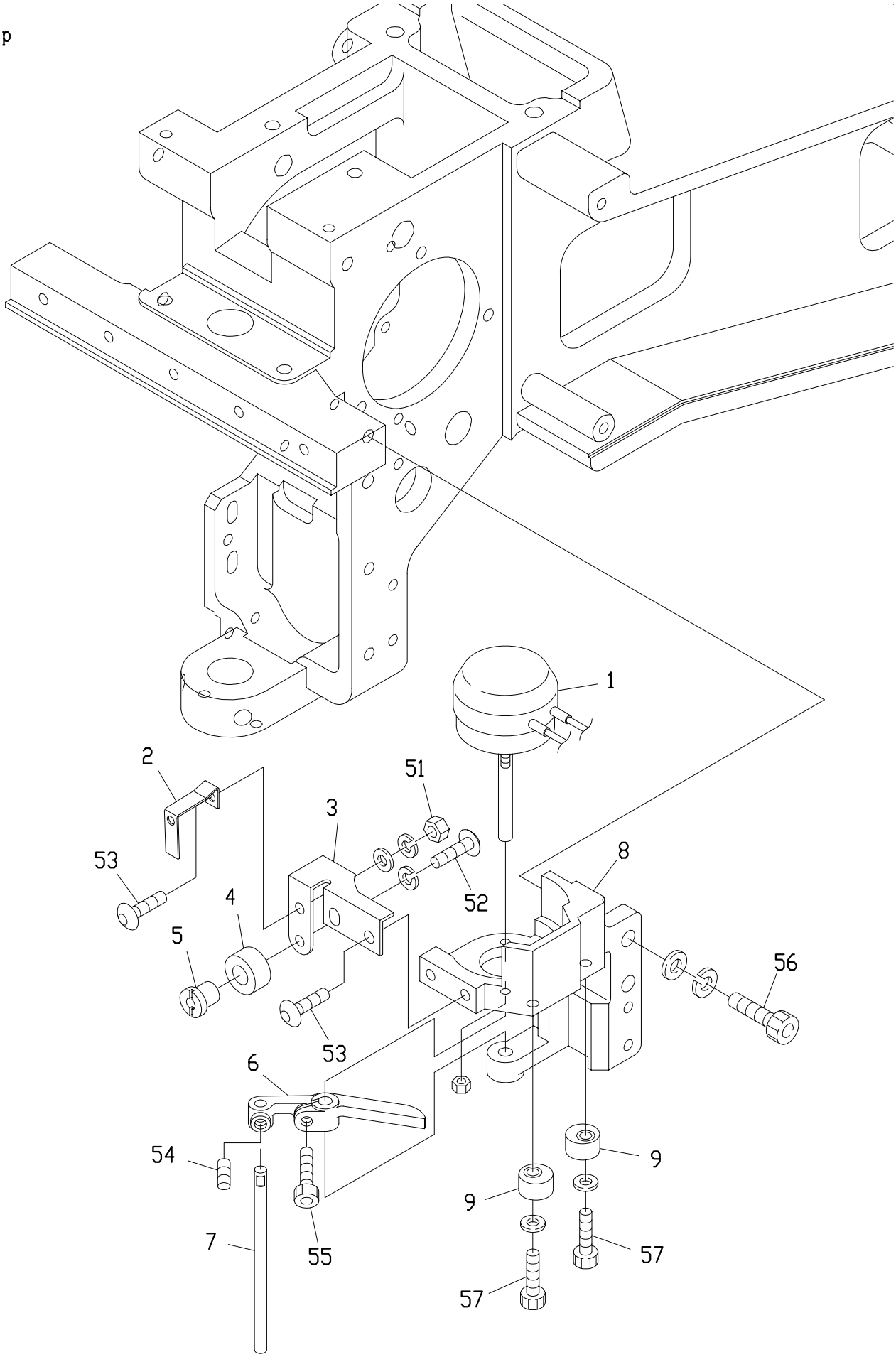

BEVT-Z9/Z1501CB

060306

05 Jump

ITEM	LIST NO.	DESCRIPTION	Q'TY	NOTE
1	A9056039	Rotary solenoid 3ER35-30×3×8×9(24V)	1	
2	MH230161	Indication plate	1	
3	SG230260	Needle bar stopper fixing bracket	1	
4	HT230220	Needle bar stopper	1	
5	HT230620	Needle bar stopper fixing pin	1	
6	HB240020	Jump solenoid lever	1	
7	HB240030	Jump solenoid lever pin	1	
8	RD230250	Jump solenoid fixing bracket	1	
9	HB240041	Jump eccentric	2	
51		Hex.nut M4		
52		Hex.socket button bolt M4×8		
53		Hex.socket button bolt M4×6		
54		Hex.socket set screw M4×4(With adhesion)		
55		Hex.socket bolt M4×8		
56		Hex.socket bolt M5×16(With washers)		
57		Hex.socket bolt M4×12(With plain washer) (With adhesion)		

06-1 Thread guide(Z9)

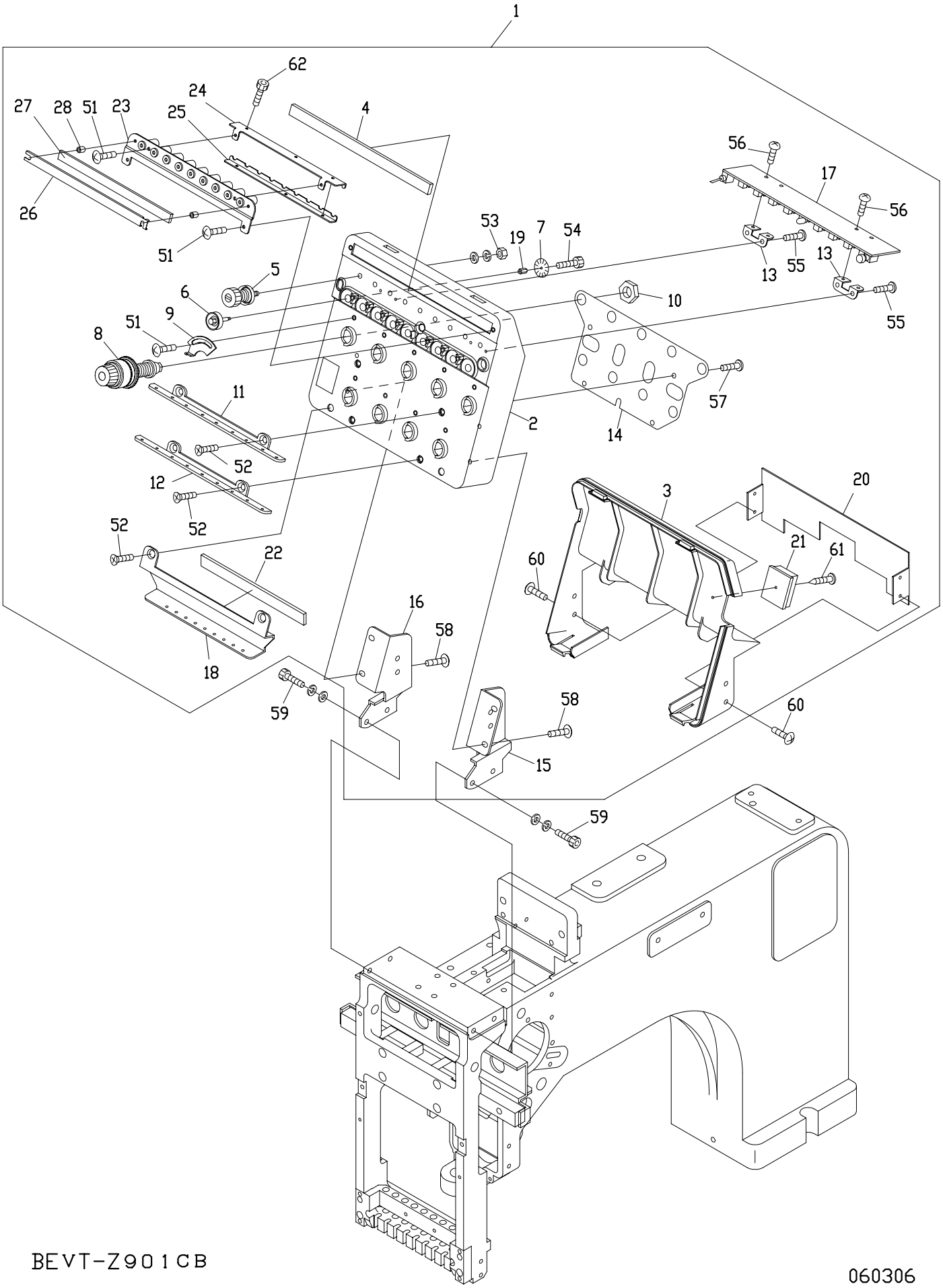

BEVT-Z901CB

060306

06-1 Thread Guide (Z9)

ITEM	LIST NO.	DESCRIPTION	Q'TY	NOTE
1	ＭＰ２４００１０	Tension base A'ssy(VT-Z9 PRO)	1	
2	ＭＰ２４００３０	Tension base case a'ssy(DT-Z9)	1	
3	ＭＰ２４００４０	Tension base cover(DS-Z９)	1	
4	ＲＲ２４０２８０	Felt(DSH-YN)	1	
5	ＲＲ２４０３００	Tension a'ssy(DS)	9	
6	ＨＴ２４０２９０	Tension wheel a'ssy	9	
7	ＨＴ２４０１０１	Lower thread detection sensor disk(YN)	9	
8	ＲＤ２４０１５４	Dial tension a'ssy(DS)	9	
9	ＲＲ２４０５１０	Thread spring adjusting plate	9	
10	ＨＴ２４０１８０	SM-nut	9	
11	ＲＲ２４０３１０	Thread guide plate upper(DSH-YN)	1	
12	ＲＲ２４０３２０	Thread guide plate lower(DSH-YN)	1	
13	ＲＲ２４０３３０	Switch board fixed base	2	
14	ＲＲ２４０３４０	Tension earth plate(DSH-YN)	1	
15	ＭＨ２４００１１	Tension base bracket・R(DS-ZN)	1	
16	ＭＨ２４００２１	Tension base bracket・L(DS-ZN)	1	
17	ＥＢＹ０２５８０	8590・switch board with thread detection	1	
18	ＭＨ２４００３０	Second thread guide plate lower(DT-ZN)	1	
19	ＫＮ５４０５１０	Tension wheel nut	9	
20	ＳＦ２４００６１	Tension base cover A(DS-ZN)	1	
21	Ａ９０６８０３２	FCW clamp(FCW-26)	1	
22	ＭＨ２４００４１	Sponge rubber(DT-ZN)	1	
23	ＭＨ２４００５１	Thread guide plate	1	
24	ＭＫ２４００３１	Tube control (top)	1	
25	ＭＫ２４００４１	Tube control (bottom)	1	
26	ＭＫ２４００５０	Felt frame (DT-ZN)	1	
27	ＭＫ２４００６０	Felt (DT-ZN)	1	
28	Ａ９０１２４４６	Spacer (3x7.5)	2	
51		Truss screw M3×5		
52		Flush screw M4×8		
53		Hex.nut SM11/64(With washers)		
54		Hex.socket bolt M2×3		
55		Pan head tapping screw B tight M3×8		
56		Pan screw M3×4		
57		Pan screw M4×6		
58		Truss screw M4×10		
59		Hex.socket bolt M5×15(With washers)		
60		Truss screw M3×8		
61		Pan head tapping screw B tight M3×5		
62		Hex.socket bolt M3x15		

06-2 Thread guide(Z15)

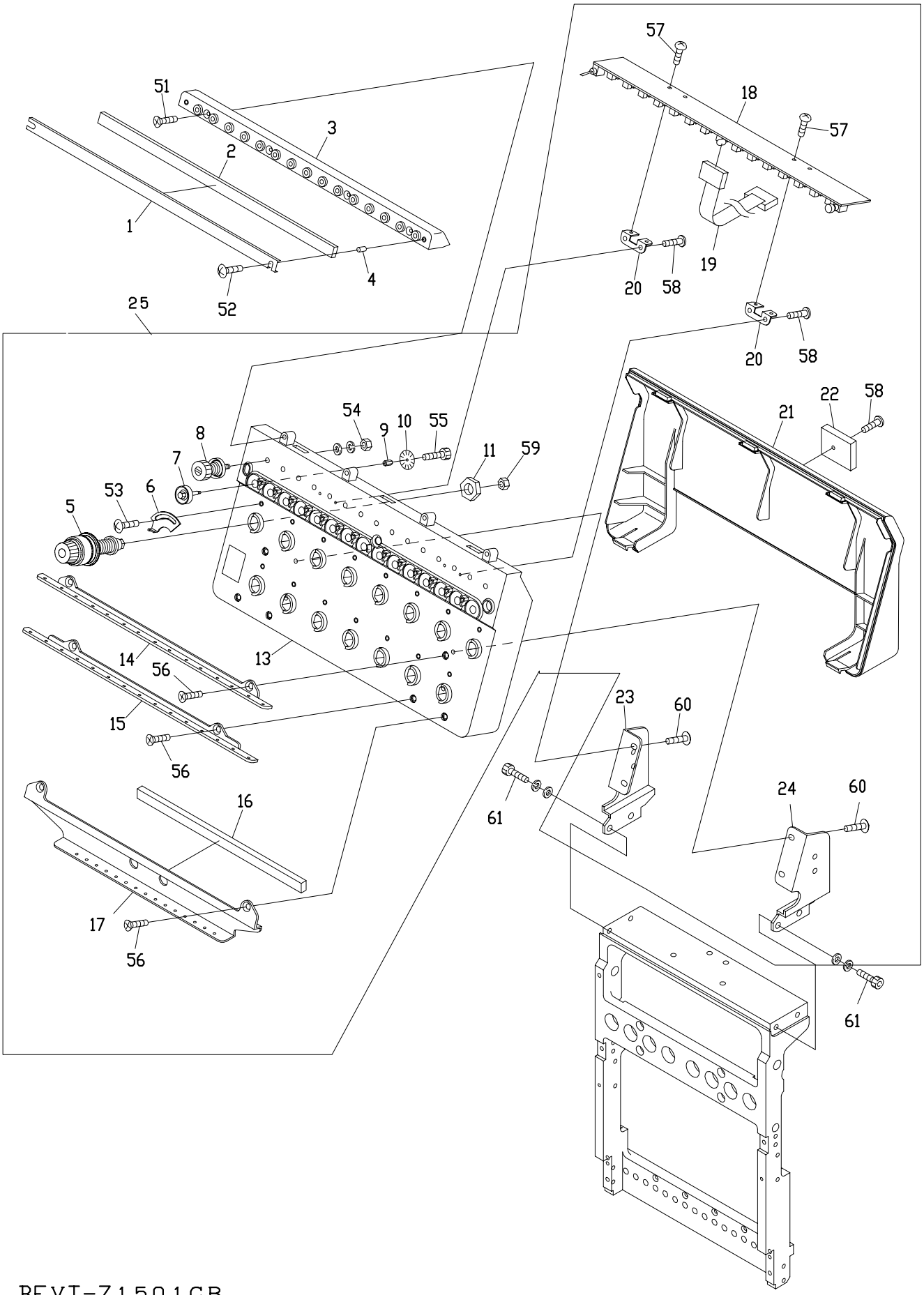

BEVT-Z1501CB

060306

06-2 Thread Guide (Z15)

ITEM	LIST NO.	DESCRIPTION	Q'TY	NOTE
1	ＲＶ２４０１００	Felt frame(DSH-ZQ)	Ｈ x 1	
2	ＲＶ２４０１１０	Felt(DSH-ZQ)	Ｈ x 1	
3	ＰＧ２４００４０	Thread collar base(VS-Z15)	Ｈ x 1	
4	Ａ９０１２４３８	Felt hold spacer(DSH-ZQ)	Ｈ x 2	
5	ＲＤ２４０１５４	Dial tension a'ssy(DS)	Ｈ x 15	
6	ＲＲ２４０５１０	Thread spring adjusting plate	Ｈ x 15	
7	ＨＴ２４０２９０	Tension wheel a'ssy	Ｈ x 15	
8	ＲＲ２４０３００	Tension a'ssy(DS)	Ｈ x 15	
9	ＫＮ５４０５１０	Tension wheel nut	Ｈ x 15	
10	ＨＴ２４０１０１	Lower thread detection sensor disk(YN)	Ｈ x 15	
11	ＨＴ２４０１８０	SM-nut	Ｈ x 15	
12	/	/	Ｈ x 1	
13	ＰＧ２４００１０	Tension base case a'ssy(VS-15)	Ｈ x 1	
14	ＲＶ２４００４０	Thread guide plate upper(DSH-ZQ)	Ｈ x 1	
15	ＲＶ２４００５０	Thread guide plate lower(DSH-ZQ)	Ｈ x 1	
16	ＲＶ２４００９１	Sponge rubber(DSH-ZQ)	Ｈ x 1	
17	ＲＶ２４００６２	Second thread guide plate(DSH-ZQ)	Ｈ x 1	
18	ＥＢＹ０２６１０	8560・switch board with thread detection	Ｈ x 1	
19	/	H2532 16 needle flat cable	Ｈ x 1	
20	ＲＲ２４０３３０	Switch board fixed base	Ｈ x 2	
21	ＰＧ２４００２０	Tension base cover(VC-Z15)	Ｈ x 1	
22	Ａ９０６８０３２	FCW clamp(FCW-26)	Ｈ x 1	
23	ＲＶ２４００８１	Tension base bracket・L(DSH-ZQ)	Ｈ x 1	
24	ＲＶ２４００７１	Tension base bracket・R(DSH-ZQ)	Ｈ x 1	
25	ＭＰ２４０００００	Tension base Assy(VT-Z15)	Ｈ x 1	
51		Flush screw M3×8		
52		Truss screw M3×14		
53		Truss screw M3×5		
54		Hex.nut SM11/64(With washers)		
55		Hex.socket bolt M2×3		
56		Flush screw M4×8		
57		Pan screw M3×4		
58		Pan head tapping screw B tight M3×8		
59		Hex.nut M4 Ⅰ		
60		Truss screw M4×10		
61		Hex.socket bolt M5×15(With washers)		

07 Color change

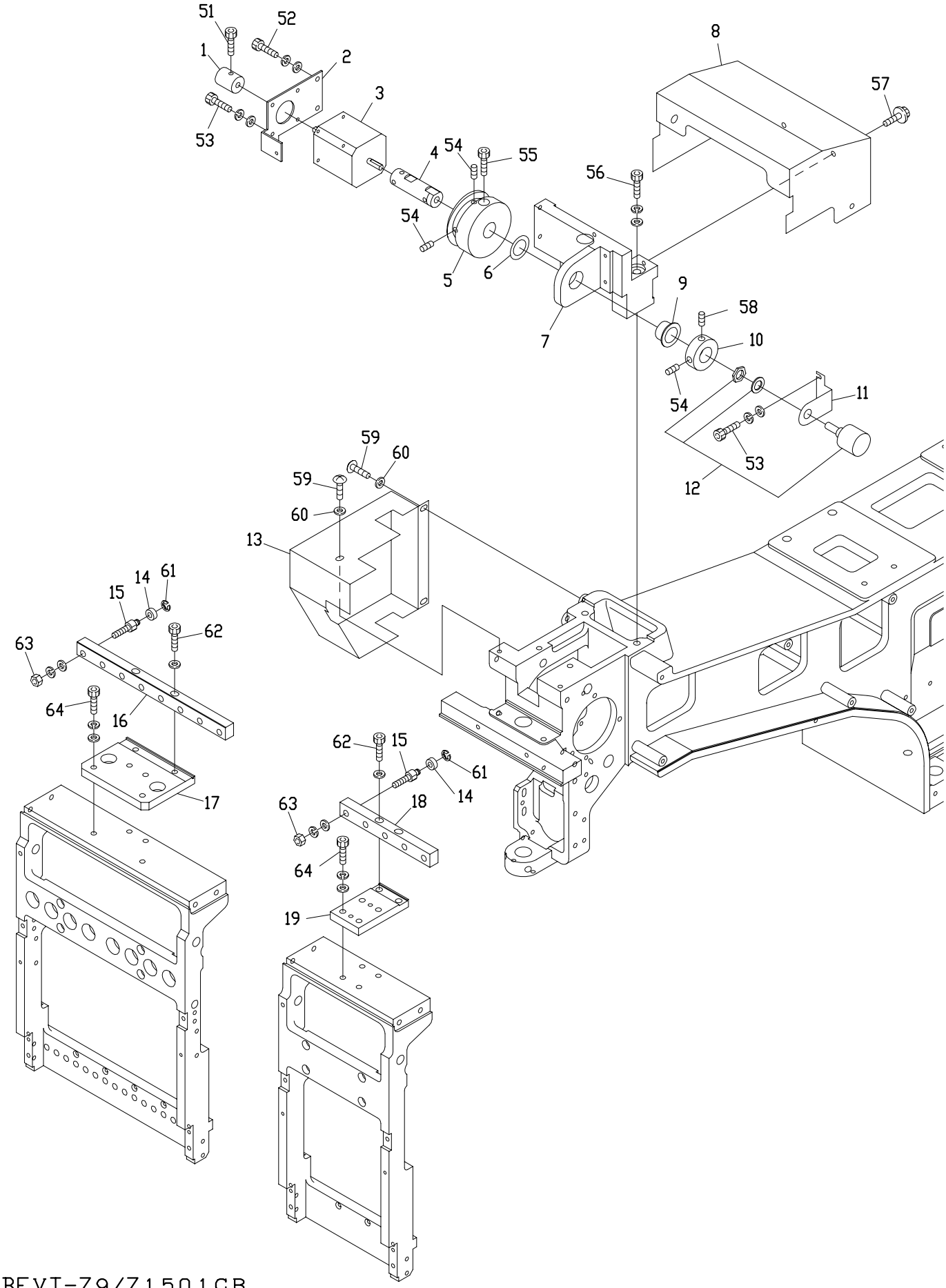

BEVT-Z9/Z1501CB

060306

07 Color Change

ITEM	LIST NO.	DESCRIPTION	Q'TY	NOTE
1	MG330090	Manual connecting shaft	1	
2	MG330060	Color change motor bracket	1	
3	MG330110	Color change motor(TS3617N111E24)	1	
4	MG330040	Color change cam connecting shaft	1	
5	MG330030	Color change cam	1	
6	A9010109	Polyester slider(STW-FT150)	1	
7	MK330000	Color change base	1	
8	MK250070	Color change cover	1	
9	A9011241	DU bush with flange(MB1510-23FDU)	1	
10	MG330080	Color change set collar	1	
11	MG330070	Potentiometer fixed plate	1	
12	MF510010	Potentiometer(M-22E10-050)	1	
13	MK250081	Upper shaft cover(L)	1	
14	A9010063	Miniature bearing	5	Z9
			8	Z15
15	KX330160	Connecting roller shaft	5	Z9
			8	Z15
16	MG330010	Connecting block(ZQ)	1	Z15
17	MG330000	Connecting base plate(ZQ)	1	Z15
18	MF330020	Connecting block(ZN)	1	Z9
19	KX330280	Connecting base plate(ZN)	1	Z9
51		Hex.socket bolt M4×8(With nylon)		
52		Hex.socket bolt M4×12(With washer)		
53		Hex.socket bolt M3×6(With washer)		
54		Hex.socket set screw(Flat point) M4×10		
55		Hex.socket bolt M5×16		
56		Hex.socket bolt M6×50(With washer)		
57		Hex.socket flange bolt M4×8		
58		Hex.socket set screw(Cup point) M6×8		
59		Truss screw M4×8(Black chromate)		
60		Nylon washer(φ4×φ9×t1)		
61		E-ring φ3		
62		Hex.socket bolt M6×25		
63		Hex.nut M6 Ⅲ		
64		Hex.socket bolt M5×18		

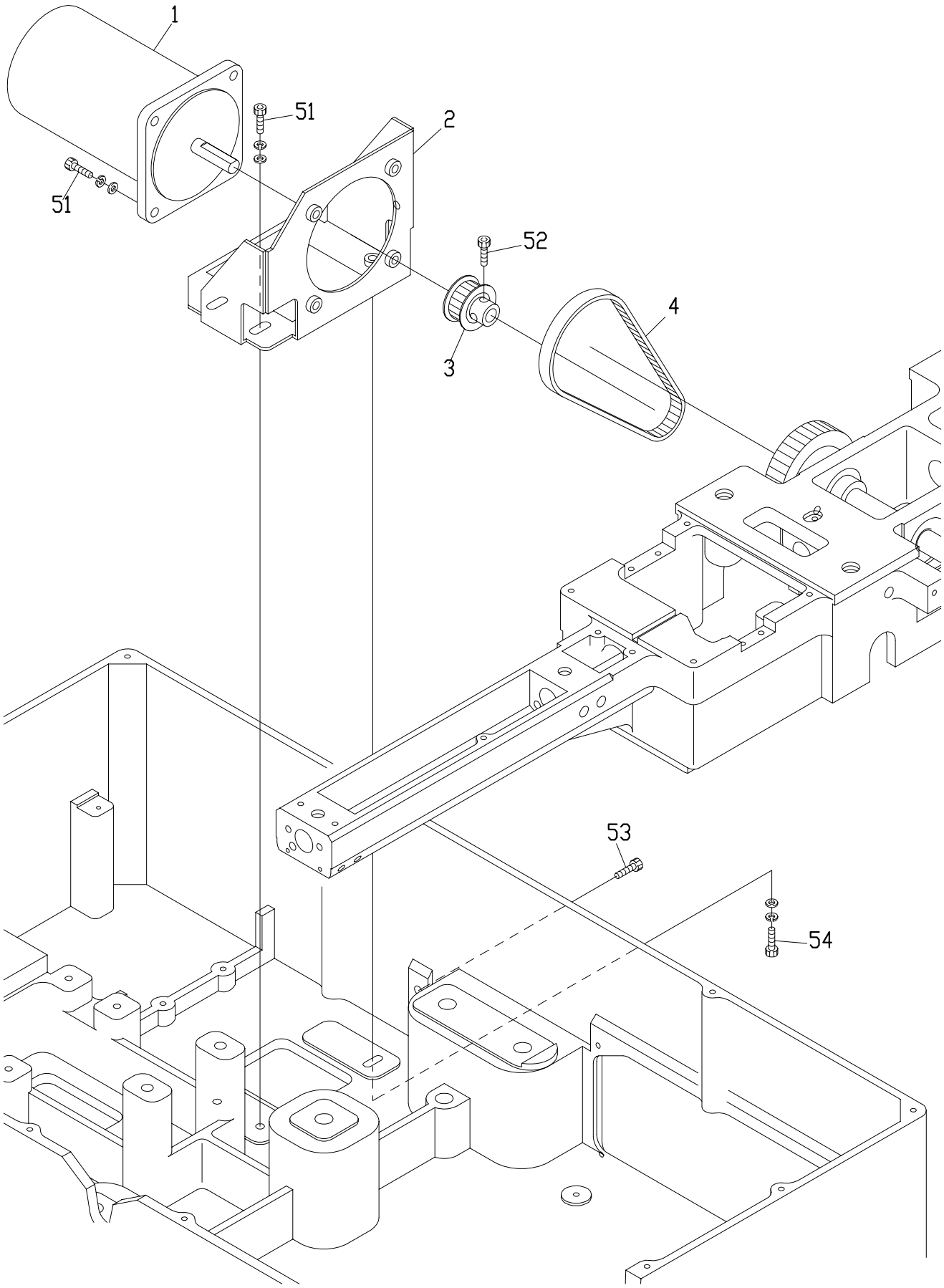

BEVT-Z1501CB

060306

1	ＥＢＹ０２８００	DT(Matsushita)100V Main shaft set	1	100V
	ＭＦ５１００３０	Main shaft motor(90W 4P PHASE4)	1	200V
2	ＭＫ３１０００１	Main shaft motor bracket	1	
3	ＭＫ３１００８１	Main shaft motor drive pulley(φ12.P18)	1	100V
	ＭＦ３１０００１	Main shaft motor drive pulley(φ10.P18)	1	200V
4	Ａ９０２０２１４	Timing belt(B100S5M390)	1	
51		Hex.socket bolt M6×20(With washers)		
52		Hex.socket bolt M6×8		
53		Hex.socket bolt M6×30		
54		Hex.socket bolt M6×30(With washers)		

10A Pantograph

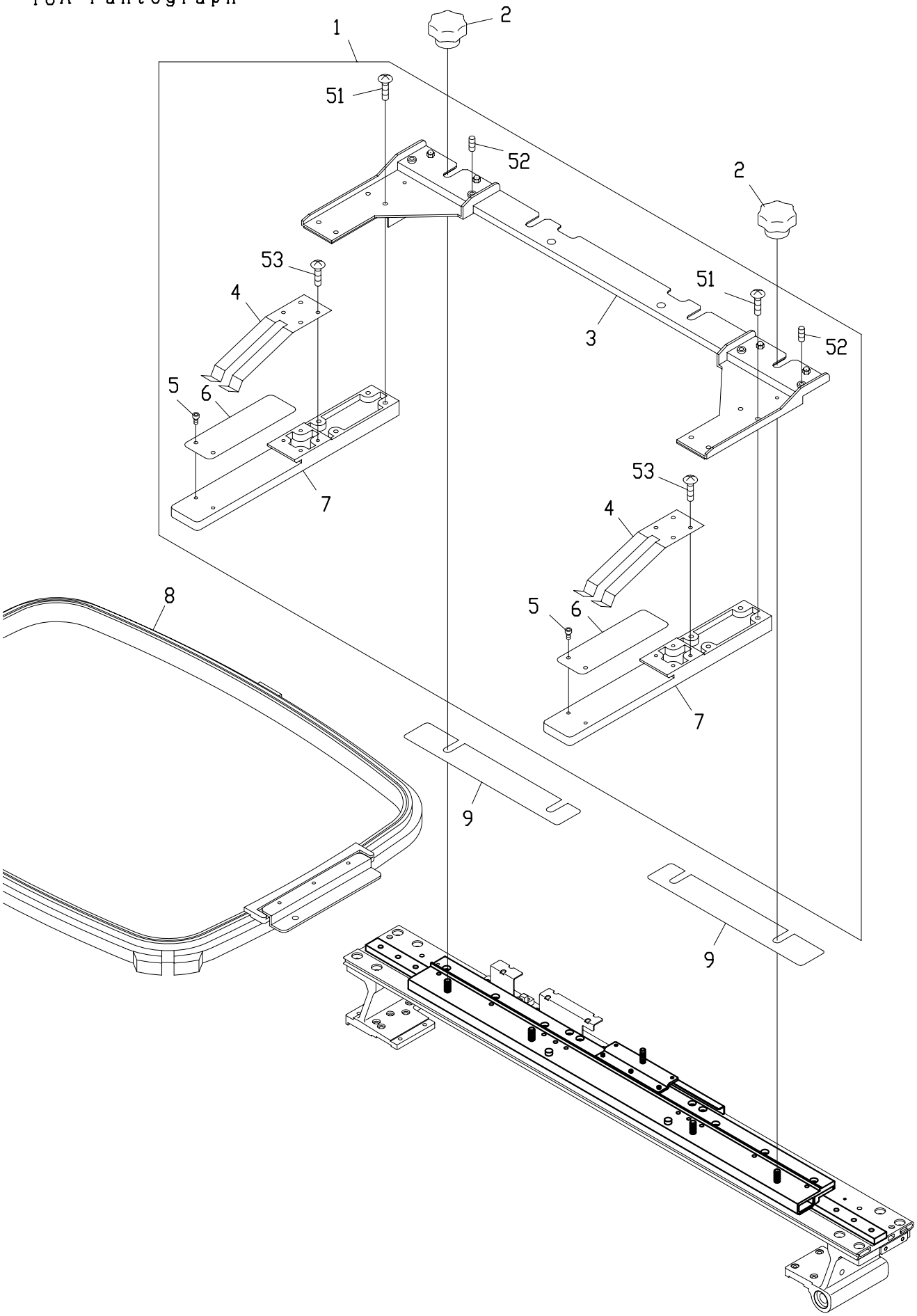

BEVT-Z9/Z1501CB

060306

10A Pantograph drive A

ITEM	LIST NO.	DESCRIPTION	Q'TY	NOTE
1	ＭＫ７３００５０	Product pantograph stay a'ssy(DT,P520)	1	
2	Ａ９０１２４３７	Knob nut(φ32 M6)	4	
3	ＭＫ７３００１３	Pantograph stay main body bracket (DT,P520)	1	
4	ＬＡ７３０６５０	Product pantograph hold spring	2	
5	ＬＡ７３０６１０	Positioning pin	4	
6	ＬＡ７３０６３０	Slide plate	2	
7	ＬＡ７３０６００	Pantograph stay main body(ME)	2	
8	FR92330438A520A	Square pantograph a'ssy 330×438(P=520)	1	
9	ＭＫ７３００６０	Product pantograph spacer(DT,P520)	2	
51		Truss screw M4×10(SUS)		
52		Hex.socket set screw M4×6 (Nylon mec)(Flat point)		
53		Truss screw M3×10(SUS)		

10B Pantograph drive B

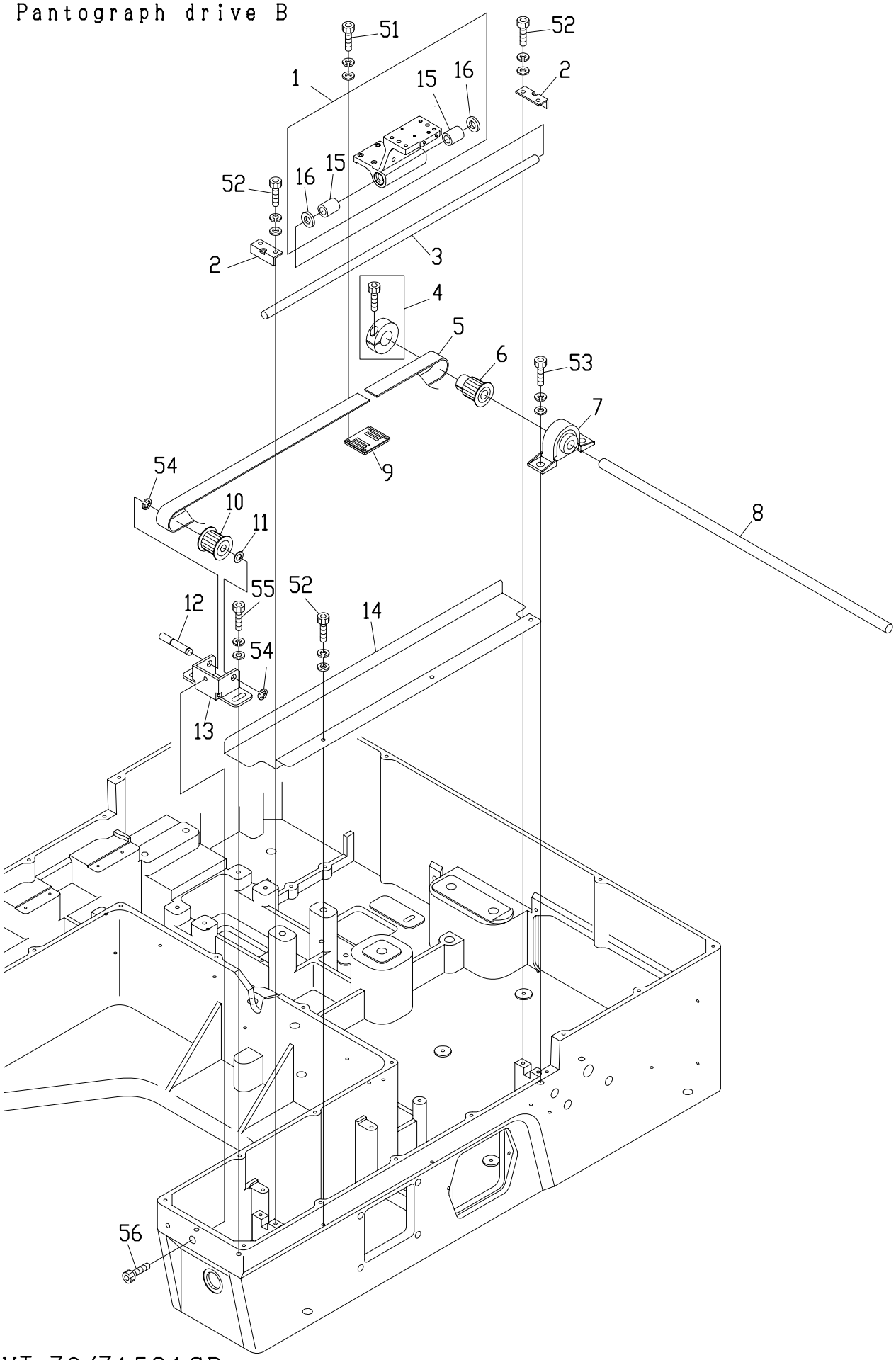

BEVT-Z9/Z1501CB

060306

10B Pantograph drive B

ITEM	LIST NO.	DESCRIPTION	Q'TY	NOTE
1	ＭＫ４８０００１	H-shaft joint bracket(R)	1	
2	ＭＫ４８００５０	Guide shaft holder plate	2	
3	Ａ９０１１２５６	Guide holder(SF10 g6-450L)	1	
4	ＨＨ４８１９８０	φ19 clamp	1	
5	Ａ９０２０２１５	Timing belt(B200S5M、1120mm)	1	
6	ＭＨ４８００３０	H-shaft motor drive pulley	1	
7	Ａ９０１１２３６	Pillow block(SBPP 201F)	1	
8	ＭＫ４８００３０	H-shaft connecting shaft	1	
9	ＭＫ４８００６０	H-shaft belt clamp plate	1	
10	ＭＨ４８００４０	H-shaft motor timing pulley	1	
11	Ａ９０１２１６４	Thrust washer(R-TW0815)	1	
12	ＭＨ４８０１２０	H-shaft belt tension shaft	1	
13	ＭＫ４８００４０	H-shaft belt tension bracket	1	
14	ＭＫ２５０３００	H-shaft guard plate	1	
15	Ａ９０１１１０３	Slide shaft holder metal bush(SMZ10-20)	2	
16	Ａ９０１１１２３	Felt seal(FLM10)	2	
51		Hex.socket bolt M3×12(With washers)		
52		Hex.socket bolt M4×12(With washers)		
53		Hex.socket bolt M8×20(With washers)		
54		E-ring φ6		
55		Hex.socket bolt M6×20(With washers)		
56		Hex.socket bolt M5×20		

10C Pantograph drive C

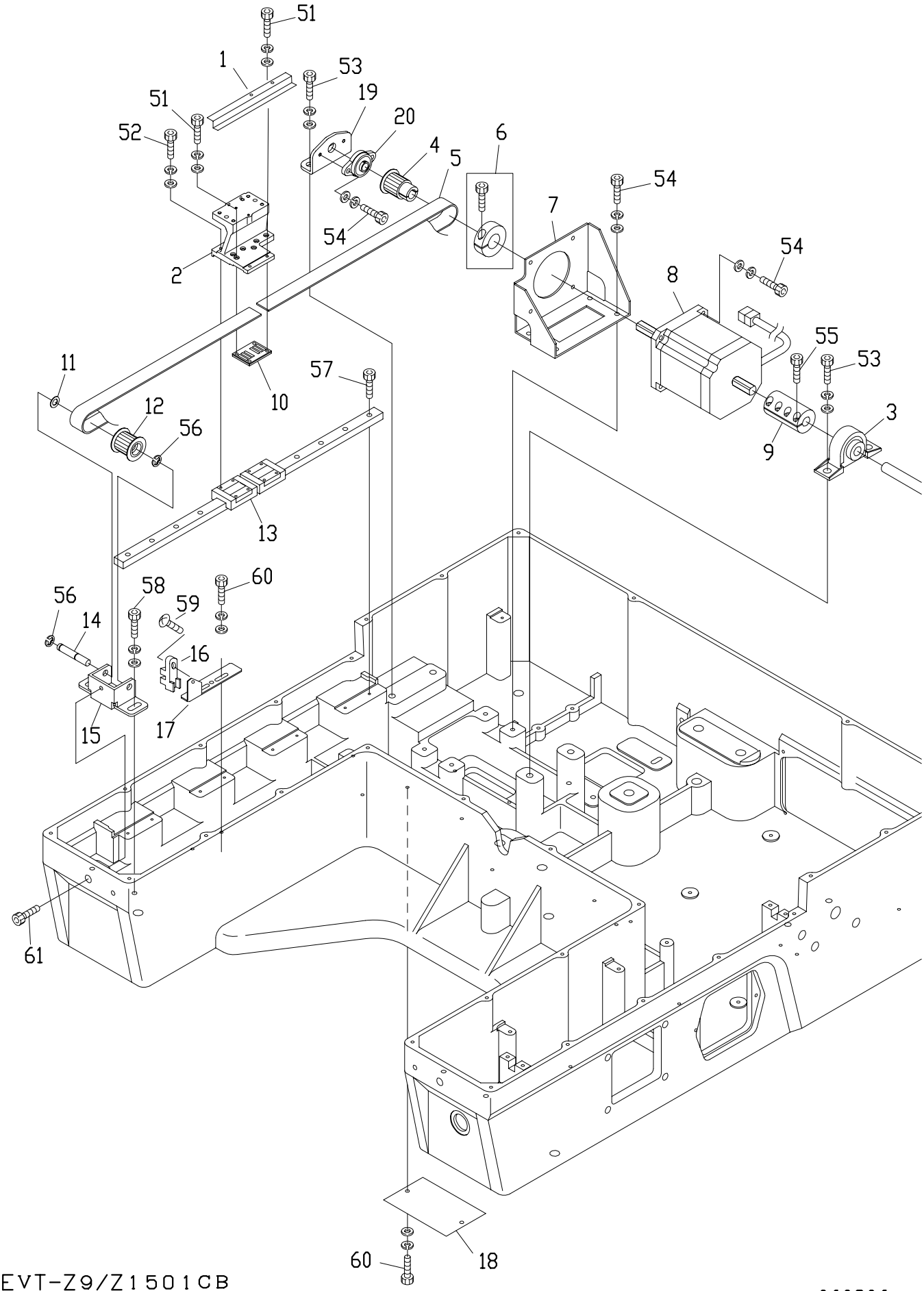

BEVT-Z9/Z1501CB

060306

10C　Pantograph drive C

ITEM	LIST NO.	DESCRIPTION	Q'TY	NOTE
1	ＭＫ４８０３５０	H-shaft origin point detector plate	1	
2	ＭＫ４８００１１	H-shaft joint bracket(L)	1	
3	Ａ９０１１２３６	Pillow block(SBPP 201F)	1	
4	ＭＨ４８００３０	H-shaft motor drive pulley	1	
5	Ａ９０２０２１５	Timing belt(B200S5M、1120mm)	1	
6	ＨＨ４８１９８０	φ19 clamp	1	
7	ＭＫ４８００２０	H-shaft motor bracket	1	
8	ＭＨ４８０２９０	Pluse motor double shaft TS3630N1208E10	1	
9	ＭＨ４８００６０	H-shaft connecting coupling	1	
10	ＭＫ４８００６０	H-shaft belt clamp plate	1	
11	Ａ９０１２１６４	Thrust washer(R-TW0815)	2	
12	ＭＨ４８００４０	H-shaft motor timing pulley	1	
13	Ａ９０１１２５７	LM guide(2RSR15MUU+430L)	1	
14	ＭＨ４８０１２０	H-shaft belt tension shaft	1	
15	ＭＫ４８００４０	H-shaft belt tension bracket	1	
16	ＥＤＹ００２７０	Photointerrupters(GP1A75E)	1	
17	ＭＫ４８０３４１	H-shaft origin point sensor bracket	1	
18	ＭＫ２５００９０	H-shaft motor bracket air well cover	1	
19	ＭＫ４８０３３０	H-Shaft holder bracket	1	
20	Ａ９０１１０４４	Shaft holder unit (UFL001)	1	
51		Hex.socket bolt M3×12(With washers)		
52		Hex.socket bolt M3×10(With washers)		
53		Hex.socket bolt M8×20(With washers)		
54		Hex.socket bolt M5×15(With washers)		
55		Hex.socket bolt M4×15		
56		E-ring φ6		
57		Hex.socket bolt M3×12		
58		Hex.socket bolt M6×20(With washers)		
59		Truss screw M3×8		
60		Hex.socket bolt M4×12(With washers)		
61		Hex.socket bolt M5×20		

10D Pantograph drive D

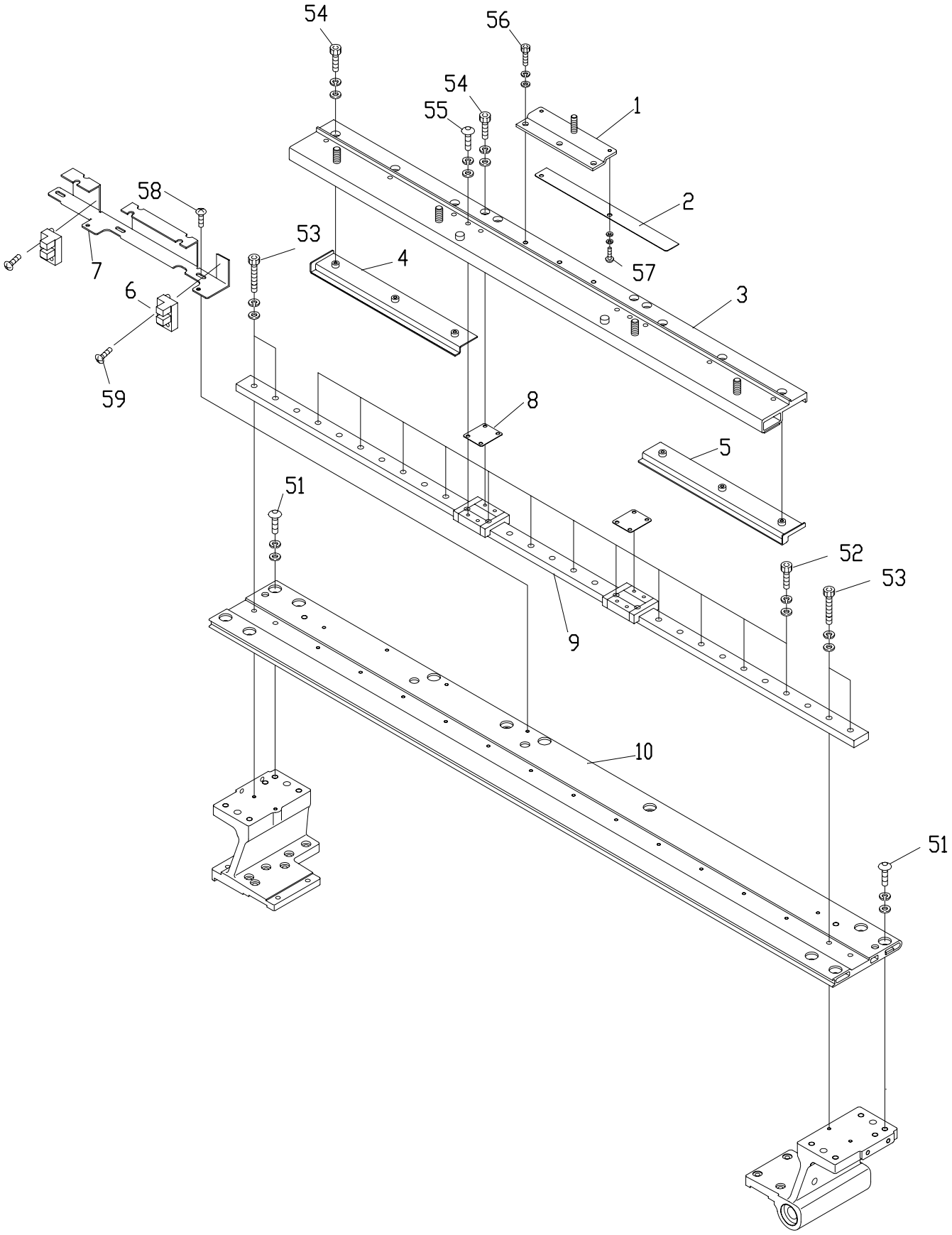

BEDT-Z9/Z1501CB

060306

10D Pantograph drive D

ITEM	LIST NO.	DESCRIPTION	Q'TY	NOTE
1	ＭＫ４８０２５０	V-shaft joint plate	1	
2	ＭＫ４８０１６２	V-shaft origin point detector plate	1	
3	ＭＫ４８０２７０	V-shaft slide bracket	1	
4	ＭＫ４８０３２０	V-shaft guard bracket(L)	1	
5	ＭＫ４８０３００	V-shaft guard bracket(R)	1	
6	ＥＤＹ００２７０	Photointerrupters(GP1A75E)	2	
7	ＭＫ４８０１５２	V-shaft origin point sensor bracket	1	
8	ＭＫ４８０３１０	LM spacer	2	
9	Ａ９０１１２６０	LM guide(2SRS12MUU+720L)	1	
10	ＭＫ４８０２６０	V-shaft guide frame	1	
51		Hex.socket button bolt M5×12		
52		Hex.socket bolt M3×8		
53		Hex.socket bolt M3×18		
54		Hex.socket bolt M3×6(Uni-chromate)		
55		Hex.socket button bolt M3x8(Uni-chromate)		
56		Hex.socket bolt M4×12(Uni-chromate)		
57		Hex.socket button bolt M3×4		
58		Truss screw M3x6(Black chromate)		
59		Truss screw M3x10(Uni-chromate)		

10E Pantograph drive E

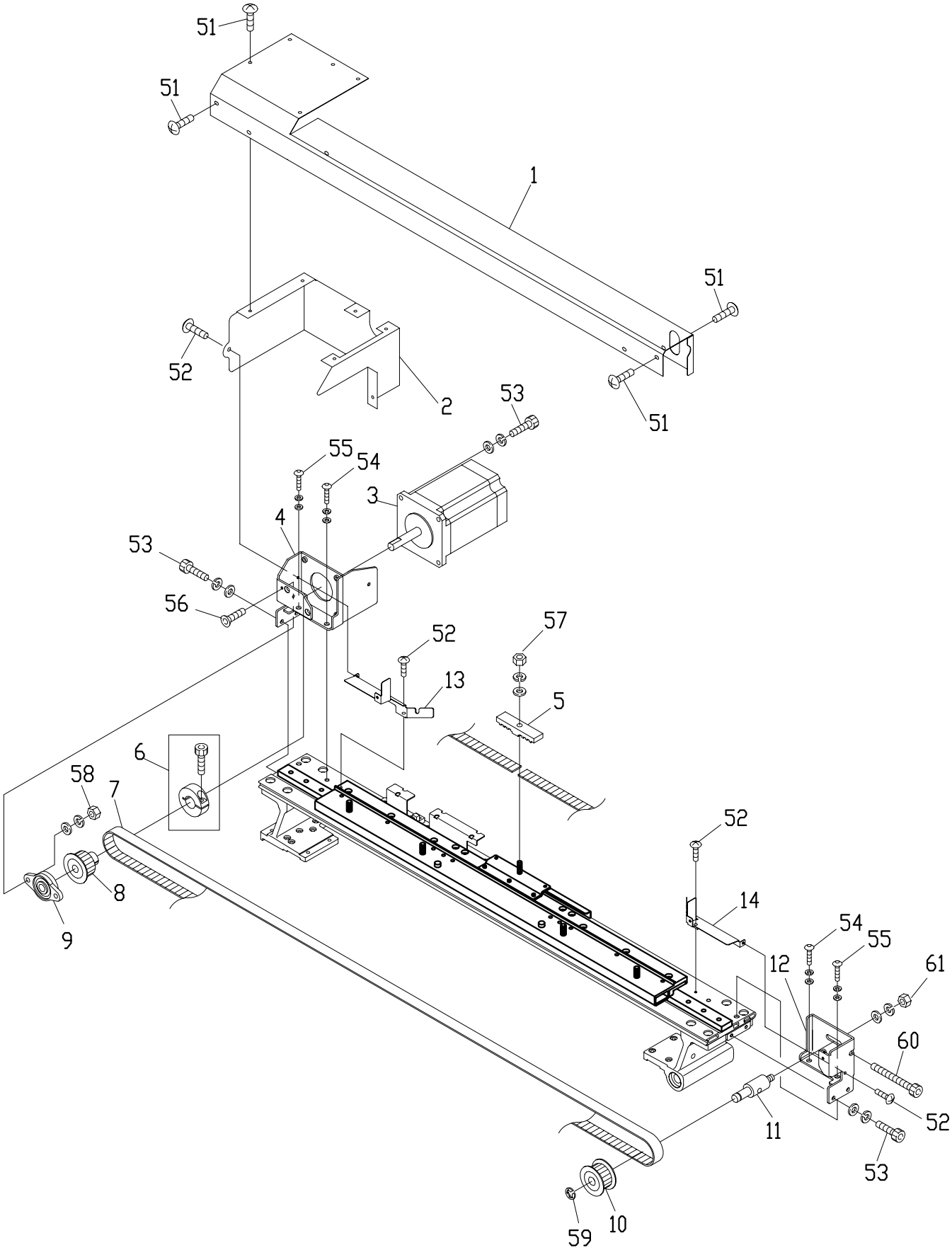

BEVT-Z9/Z1501CB

060306

10E　Pantograph drive E

ITEM	LIST NO.	DESCRIPTION	Q'TY	NOTE
1	ＭＫ２５０１１１	V-shaft pantograph cover	1	
2	ＭＫ２５０１２１	V-shaft pantograph support cover	1	
3	ＭＨ４８０２８０	Pluse motor single shaft TS3624N1309E8	1	
4	ＭＫ４８００９１	V-shaft motor bracket	1	
5	ＭＨ４８０２３０	Belt clamp	1	
6	Ａ９０１３０７２	Set collar(SCSAT･13･10)	1	
7	Ａ９０２０２１６	Timing belt(B100S5M、1420mm)	1	
8	ＭＨ４８０１８０	V-shaft motor drive pulley	1	
9	Ａ９０１１２５０	Flange unit(UFL08)	1	
10	ＭＨ４８０１９０	V-shaft motor timing pulley	1	
11	ＭＨ４８０２４０	V-shaft belt tension shaft	1	
12	ＭＫ４８０１０２	V-shaft timing pulley bracket	1	
13	ＭＫ４８０２８０	V-shaft timing pulley cover (R)	1	
14	ＭＫ４８０２９０	V-shaft timing pulley cover (L)	1	
51		Truss screw M3×3(Black chromate)		
52		Truss screw M3×6(Black chromate)		
53		Hex.socket bolt M4×12(With washers)		
54		Hex.socket button bolt M5×12(With washers)		
55		Hex.socket button bolt M5×22(With washers)		
56		Hex.socket flush bolt M4×12		
57		Hex.nut M5 Ⅰ(With washers)		
58		Hex.nut M4 Ⅰ(With washers)		
59		E-ring φ6		
60		Hex.socket bolt M5×40(20)(Washer)		
61		Hex. Cap nut M6 Ⅲ(With washers)		

11 Control

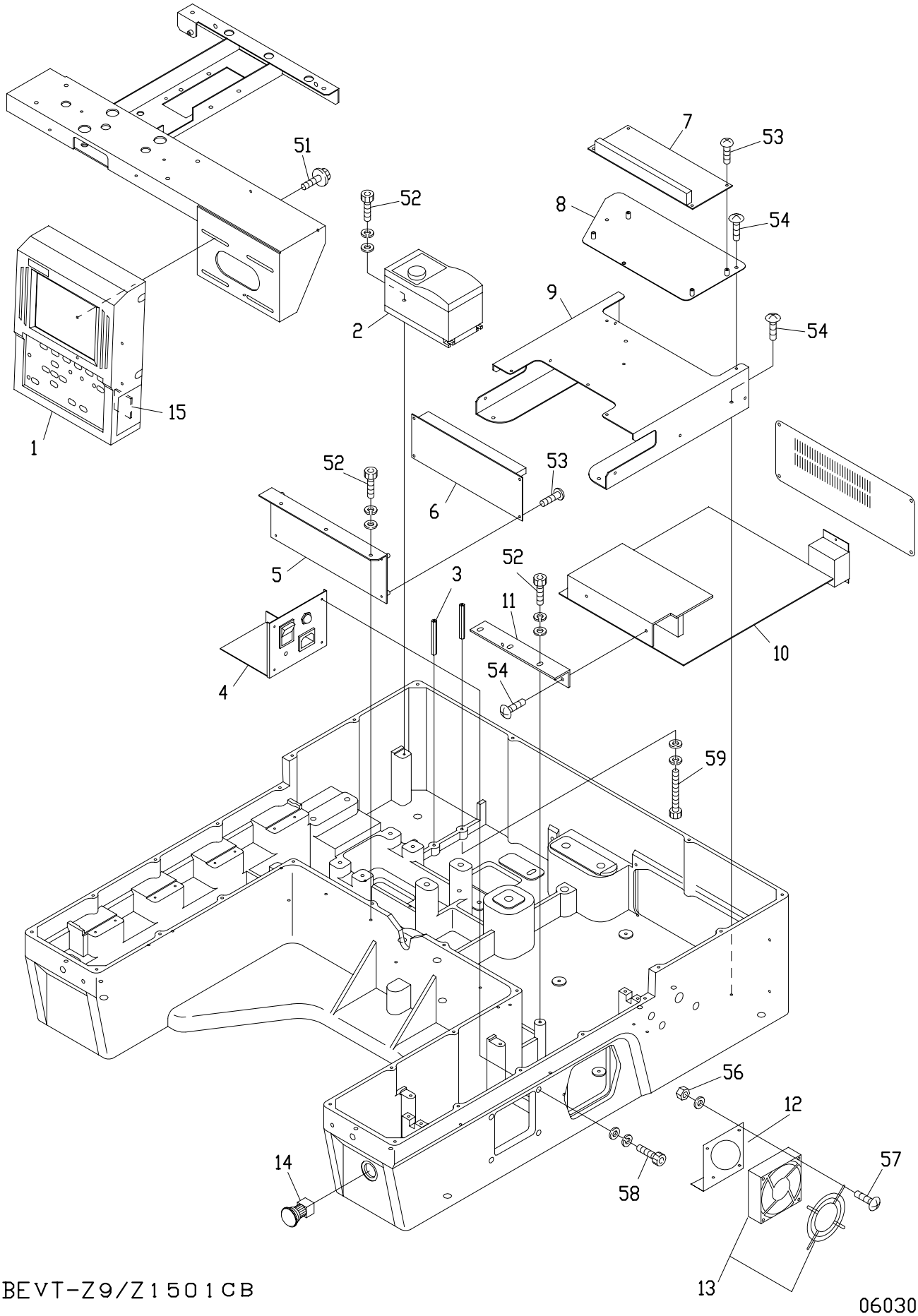

BEVT-Z9/Z1501CB

060306

11 Control

ITEM	LIST NO.	DESCRIPTION	Q'TY	NOTE
1	ＥＡＹ０９２Ａ１	BEVT automat	1	
2	ＥＢＹ０２６７０	Inverter 8750 (200V DT)	1	200V
3	/	/		
4	ＥＢＹ０２７６１	BEDT power unit 8733	1	
5	ＭＫ２５０１７０	24V power bracket	1	
6	ＥＢＹ０２６５０	Switching power supply(DC24V) JBW24-6R3	1	
7	ＥＢＹ０２６６１	Switching power supply(DC48V) LEP150F-48	1	
8	ＭＫ２５０２１０	48V power bracket	1	
9	ＭＫ２５０１４０	Driver board bracket	1	
10	ＥＢＹ０２６２０	BEDT driver board 8720	1	
11	ＭＫ２５０１５０	Driver board cooling fin	1	
12	ＭＫ２５０２９０	Cooling fan plate	1	
13	ＥＢＹ０２７２０	Cooling fan DT	1	
14	ＥＢＹ０１７１０	Emergency stop switch(HW1B-V40)	1	
15	Ａ９０５４０５４	Compact flash 32M	1	
16	ＭＫ２５０２９０	Cooling fanbracket	1	
51		Hex.socket flange bolt M4×10		
52		Hex.socket bolt M4×12(With washers)		
53		Pan screw M3×8		
54		Truss screw M4×8(Black chromate)		
55		Truss screw M3×4(Black chromate)		
56		Hex.nut M4		
57		Truss screw M4×35(Black chromate)		
58		Hex.socket bolt M3×10(With washers)		
59		Hex.socket bolt M5×30(With washers)		

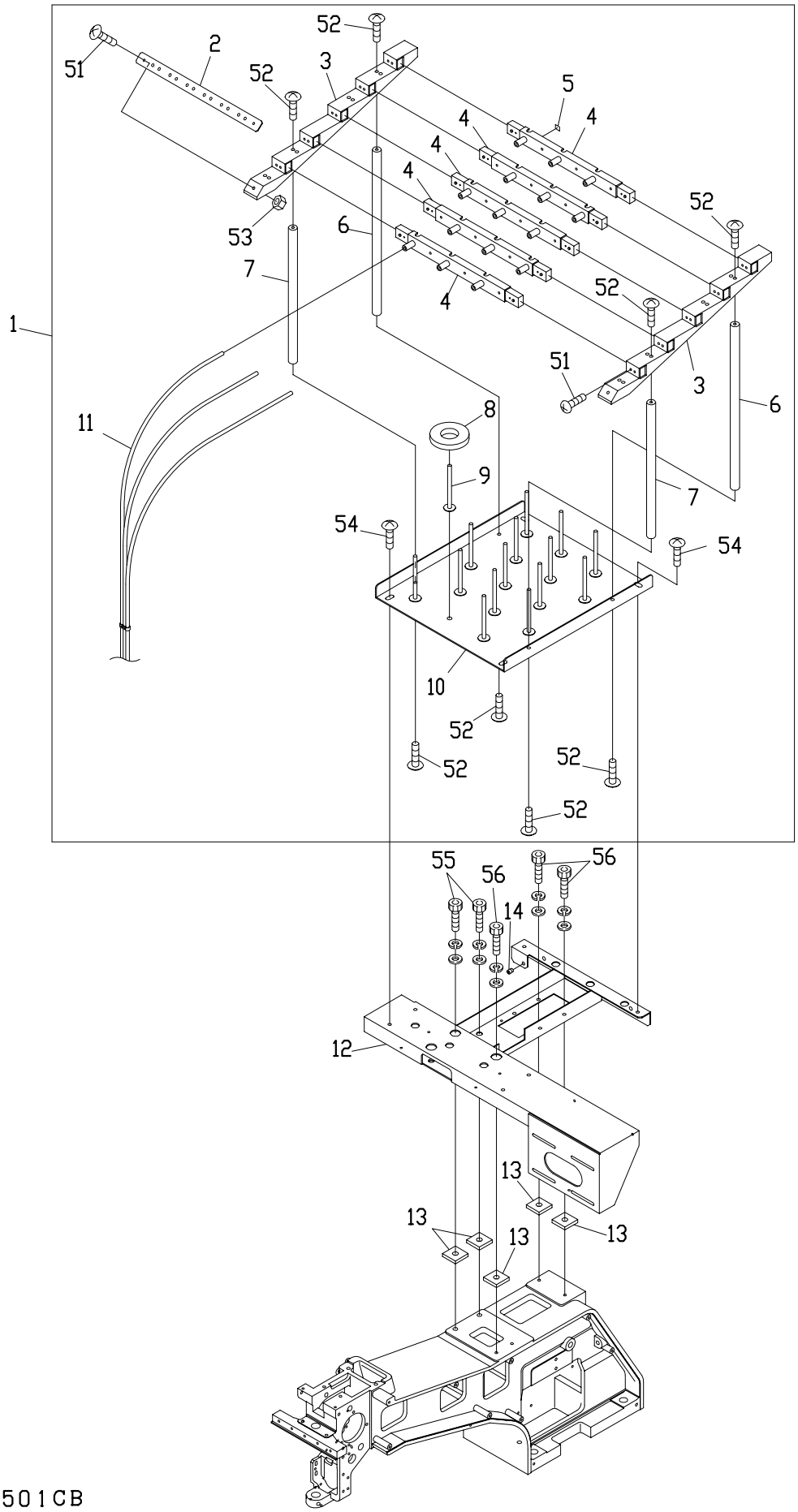
52
2
51
52
3
5
4
4
4
4
52
53
6
7
4
52
1
51
3
6
11
8
9
7
54
54
10
52
52
52
52
55
56
56
14
12
13
13
13
13

ITEM	LIST NO.	DESCRIPTION	Q'TY	NOTE
1	ＭＫ７１００２０	Spool holder a'ssy(DT-Z9-501)	1	Z9
	ＭＰ７１００００	Spool holder a'ssy(VT-Z15-501)	1	Z15
2	ＲＤ７１０３７０	Hose hold bracket	1	
3	ＲＤ７１０３４０	Guide base(15 needles)	2	
4	ＲＤ７１０３３０	Thread guide base	5	
5	ＲＤ７１０３８０	Number seal	1	
6	ＲＤ７１０３６１	Pillar B	2	
7	ＲＤ７１０３５１	Pillar A	2	
8	ＫＦ７１０３９０	Spool holder felt(8×34×φ70)	１５	
9	ＨＴ７１００００	Spool holder pin	１５	
10	ＳＣ７１００１０	Spool holder base	1	
11	ＲＶ７１００５０	Spool tube DB3-6×4		Cut product
12	ＭＫ７１００１０	Spool holder base bracket(DT-ZQ)	1	
13	ＭＨ７１００５１	Gel(30×30×t6)	5	
14	ＨＴ２４０４８０	Thread collar	1	
51		Truss screw M4×10		
52		Truss screw M5×12		
53		Hex.nut M4		
54		Truss screw M6×12		
55		Hex.socket bolt M8×25(With washers)		
56		Hex.socket bolt M5×15(With washers)		

I N D E X

ＬＩＳＴ No.	SECTION №	ITEM	ＬＩＳＴ No.	SECTION №	ITEM
Ａ９０１０００４	０１Ｂ	15	Ａ９０５２０２８	０２Ｃ	3
Ａ９０１００６３	０７	14	Ａ９０５２０７８	０２Ｂ	1
Ａ９０１００６５	０４Ｃ	18	Ａ９０５４０５４	１１	15
Ａ９０１００７３	０３	18	Ａ９０５６０３９	０５	1
Ａ９０１０１０９	０７	6	Ａ９０５６０４０	０２Ａ	16
Ａ９０１１０４４	１０Ｃ	19	Ａ９０５６０４１	０２Ｃ	1
Ａ９０１１１０３	１０Ｂ	15	Ａ９０５６０４２	０４Ｃ	28
Ａ９０１１１２３	１０Ｂ	16	Ａ９０６８０３２	０６－１	21
Ａ９０１１２３６	１０Ｂ	7	Ａ９０６８０３２	０６－２	22
Ａ９０１１２３６	１０Ｃ	3	ＥＡＹ０９２Ａ１	１１	1
Ａ９０１１２４１	０７	9	ＥＢＹ０１６２５	０６－２	19
Ａ９０１１２４８	０４Ａ－１	30	ＥＢＹ０１７１０	１１	14
Ａ９０１１２５０	１０Ｅ	9	ＥＢＹ０２５８０	０６－１	17
Ａ９０１１２５１	０３	28	ＥＢＹ０２６１０	０６－２	18
Ａ９０１１２５６	１０Ｂ	3	ＥＢＹ０２６２０	１１	10
Ａ９０１１２５７	１０Ｃ	13	ＥＢＹ０２６５０	１１	6
Ａ９０１１２６０	１０Ｄ	9	ＥＢＹ０２６６１	１１	7
Ａ９０１２０２７	０１Ａ	11	ＥＢＹ０２６７０	１１	2
Ａ９０１２０５３	０４Ｃ	13	ＥＤＹ００２７０	１０Ｃ	16
Ａ９０１２１１４	０２Ｂ	12	ＥＢＹ０２７２０	１１	13
Ａ９０１２１２７	０４Ｃ	24	ＥＤＹ００２７０	１０Ｄ	6
Ａ９０１２１６４	１０Ｂ	11	ＥＢＹ０２７６１	１１	4
Ａ９０１２１６４	１０Ｃ	11	ＥＢＹ０２８００	０８	1
Ａ９０１２３６８	０４Ｂ	9	ＦＮ０７００１１Ｑ１	０４Ａ－１	15
Ａ９０１２４２１	０３	19	ＦＮ０７００１１Ｑ１	０４Ａ－２	14
Ａ９０１２４３３	００	3	ＦＲ９２３３０４３８Ａ５２０Ａ	１０Ａ	8
Ａ９０１２４３７	１０Ａ	2	ＨＢ２３００７０	０３	22
Ａ９０１２４３８	０６－２	4	ＨＢ２３００８０	０３	21
Ａ９０１２４３９	０１Ｂ	16	ＨＢ２３０２００	０４Ｂ	5
Ａ９０１２４４６	０６－１	28	ＨＢ２３０２２０	０４Ｃ	9
Ａ９０１３０６６	０２Ａ	12	ＨＢ２３０２６１	０４Ｃ	8
Ａ９０１３０７１	０１Ｂ	19	ＨＢ２３０２７１	０４Ｃ	3
Ａ９０１３０７２	１０Ｅ	6	ＨＢ２３０２８１	０４Ｃ	6
Ａ９０１４１６６	０４Ｃ	21	ＨＢ２３０３６１	０４Ｃ	5
Ａ９０１４１６７	０４Ａ－１	20	ＨＢ２３０６２０	０３	24
Ａ９０１４１６７	０４Ａ－２	19	ＨＢ２３０６５０	０３	7
Ａ９０１４１６８	０４Ｄ	23	ＨＢ２３０８００	０３	1
Ａ９０１９０３７	０４Ｃ	15	ＨＢ２４００２０	０５	6
Ａ９０１９０７１	００	13	ＨＢ２４００３０	０５	7
Ａ９０２０２１０	０１Ｂ	7	ＨＢ２４００４１	０５	9
Ａ９０２０２１４	０８	4	ＨＨ４８１９８０	０１Ｂ	18
Ａ９０２０２１５	１０Ｂ	5	ＨＨ４８１９８０	０３	33
Ａ９０２０２１５	１０Ｃ	5	ＨＨ４８１９８０	１０Ｂ	4
Ａ９０２０２１６	１０Ｅ	7	ＨＨ４８１９８０	１０Ｃ	6
Ａ９０２０２１７	０１Ｂ	9	ＨＰ２３１３７０	０４Ｂ	26

I N D E X

ＬＩＳＴ　No.	SECTION №	ITEM	ＬＩＳＴ　No.	SECTION №	ITEM
ＨＳ２１００３１	０１Ａ	9	ＫＣ２７０１０１	０４Ｃ	27
ＨＳ２１００５１	０２Ａ	1	ＫＣ２７１００１	０２Ａ	3
ＨＳ２１００８０	０２Ａ	20	ＫＣ２７１１２０	０２Ｂ	11
ＨＳ２１０３００	０２Ａ	2	ＫＣ２７１９４０	０２Ａ	19
ＨＳ２２００１０	０１Ａ	6	ＫＦ２２０２３０	０１Ａ	5
ＨＴ２２００６１	０１Ａ	18	ＫＦ２２０２４０	０１Ａ	4
ＨＴ２３０１２０	０４Ａ－１	11	ＫＦ２２０２９０	０１Ａ	17
ＨＴ２３０１２０	０４Ａ－２	10	ＫＦ２２０５３０	０１Ａ	2
ＨＴ２３０２２０	０５	4	ＫＦ２２０７１０	０１Ａ	3
ＨＴ２３０２５１	０４Ａ－１	5	ＫＦ２２１０２０	０１Ａ	1
ＨＴ２３０２６３	０４Ａ－１	7	ＫＦ２３０５０１	０３	10
ＨＴ２３０２６３	０４Ａ－２	6	ＫＦ２３０６８０	０３	11
ＨＴ２３０２８０	０４Ｂ	12	ＫＦ２３０９１０	０４Ａ－１	10
ＨＴ２３０２９０	０４Ｂ	7	ＫＦ２３０９１０	０４Ａ－２	9
ＨＴ２３０３２０	０４Ｂ	27	ＫＦ７１０３９０	１２	8
ＨＴ２３０３３０	０４Ａ－１	6	ＫＬ２２０１４０	０１Ａ	12
ＨＴ２３０３３０	０４Ａ－２	5	ＫＬ２７００９１	０２Ｃ	8
ＨＴ２３０３４０	０４Ｂ	31	ＫＬ２７０１０１	０２Ｃ	9
ＨＴ２３０４１０	０４Ｃ	7	ＫＬ２７０１２０	０２Ｃ	11
ＨＴ２３０４２０	０４Ｃ	10	ＫＬ２７０１３１	０２Ｃ	10
ＨＴ２３０４６０	０４Ｂ	23	ＫＬ２７０２６０	０２Ｃ	2
ＨＴ２３０４７１	０４Ｂ	15	ＫＬ２７０４５０	０２Ｃ	7
ＨＴ２３０４８０	０４Ｂ	24	ＫＮ２７２０１０	０２Ａ	13
ＨＴ２３０４９１	０４Ｂ	16	ＫＮ２７２４０１	０２Ａ	18
ＨＴ２３０５００	０４Ｂ	25	ＫＮ２７２４０１	０２Ｃ	5
ＨＴ２３０５１０	０４Ｂ	6	ＫＮ５４０５１０	０６－１	19
ＨＴ２３０５２０	０４Ｂ	8	ＫＮ５４０５１０	０６－２	9
ＨＴ２３０５６０	０４Ｂ	13	ＫＸ２３００４０	０４Ａ－１	26
ＨＴ２３０６２０	０５	5	ＫＸ２３００７１	０４Ｂ	4
ＨＴ２３０７３０	０４Ｂ	17	ＫＸ２４０１６１	０４Ｄ	5
ＨＴ２３０７５０	０４Ｂ	14	ＫＸ２５００８０	０１Ａ	13
ＨＴ２３０７６０	０４Ｂ	21	ＫＸ２５００８０	０２Ａ	5
ＨＴ２３０７７０	０４Ｂ	22	ＫＸ２７０００	０２Ａ	22
ＨＴ２４０１０１	０６－１	7	ＫＸ２７００１０	０２Ａ	10
ＨＴ２４０１０１	０６－２	10	ＫＸ２７００５０	０２Ｃ	13
ＨＴ２４０１８０	０６－１	10	ＫＸ２７００７０	０２Ｃ	15
ＨＴ２４０１８０	０６－２	11	ＫＸ２７０３７０	０２Ｃ	14
ＨＴ２４０２９０	０６－１	6	ＫＸ２７０４３０	０２Ａ	21
ＨＴ２４０２９０	０６－２	7	ＫＸ３３０１６０	０７	15
ＨＴ２４０４８０	１２	14	ＫＸ３３０２８０	０７	19
ＨＴ２３０２５１	０４Ａ－２	4	ＬＡ２３００８０	０４Ｃ	14
ＨＴ２７００６３	０４Ｄ	12	ＬＡ２３０１４０	０４Ｃ	16
ＨＴ２７０１８１	０２Ａ	14	ＬＡ２５００４０	０１Ａ	15
ＨＴ７１００００	１２	9	ＬＡ２７００４０	０２Ａ	17
ＫＣ２５０４８２	０１Ａ	10	ＬＡ２７００８０	０２Ｃ	16

I N D E X

ＬＩＳＴ No.	SECTION №	ITEM	ＬＩＳＴ No.	SECTION №	ITEM
ＬＡ２７０１２０	０２Ｃ	16	ＭＨ２４００２１	０６－１	16
ＬＡ２７０１５０	０２Ｃ	12	ＭＨ２４００３０	０６－１	18
ＬＡ２７０１６０	０２Ｃ	12	ＭＨ２４００４１	０６－１	22
ＬＡ７３０６００	１０Ａ	7	ＭＨ２４００５１	０６－１	23
ＬＡ７３０６１０	１０Ａ	5	ＭＰ２４００３０	０６－１	2
ＬＡ７３０６３０	１０Ａ	6	ＰＥ２５０００	０４Ｄ	4
ＬＡ７３０６５０	１０Ａ	4	ＭＨ２７０１３０	０４Ｄ	8
ＭＢ２９５２５０	０２Ｂ	4	ＭＨ２７０１４０	０４Ｄ	9
ＭＢ２９５２６０	０２Ｂ	7	ＭＨ２７０１５０	０４Ｄ	14
ＭＢ２９５２７０	０２Ｂ	6	ＭＨ３１００１１	０１Ｂ	20
ＭＢ２９５２９０	０２Ｂ	5	ＭＨ３１００９１	０１Ｂ	8
ＭＦ２１００７０	０２Ｂ	3	ＭＨ４８００３０	１０Ｂ	6
ＭＦ２１００８０	０２Ｂ	2	ＭＨ４８００３０	１０Ｃ	4
ＭＦ３１０００１	０８	3	ＭＨ４８００４０	１０Ｂ	10
ＭＦ３３００２０	０７	18	ＭＨ４８００４０	１０Ｃ	12
ＭＦ５１０００	０１Ｂ	21	ＭＨ４８００６０	１０Ｃ	9
ＭＦ５１００１０	０７	12	ＭＨ４８０１２０	１０Ｂ	12
ＭＦ５１００２０	０２Ｂ	10	ＭＨ４８０１２０	１０Ｃ	14
ＭＦ５１００３０	０８	1	ＭＨ４８０１８０	１０Ｅ	8
ＭＧ２１００５０	０２Ｂ	9	ＭＨ４８０１９０	１０Ｅ	10
ＭＧ２１００７０	０２Ｂ	8	ＭＨ４８０２３０	１０Ｅ	5
ＭＧ３３０００	０７	17	ＭＨ４８０２４０	１０Ｅ	11
ＭＧ３３００１０	０７	16	ＭＨ４８０２８０	１０Ｅ	3
ＭＧ３３００３０	０７	5	ＭＨ４８０２９０	１０Ｃ	8
ＭＧ３３００４０	０７	4	ＭＨ７１００５１	１２	13
ＭＧ３３００６０	０７	2	ＭＨ７９００１０	００	10
ＭＧ３３００７０	０７	11	ＭＫ１１００３１	００	11
ＭＧ３３００８０	０７	10	ＭＫ１１００１０	００	15
ＭＧ３３００９０	０７	1	ＭＫ１２００３０	００	1
ＭＧ３３０１１０	０７	3	ＭＫ１２００４０	００	2
ＭＨ１２００１０	００	5	ＭＫ１２００２０	００	4
			ＭＫ２１００２１	０１Ｂ	4
ＳＷ２３００００	０４Ａ－１	24	ＭＫ２１００３１	０１Ａ	16
ＭＨ２３００２２	０４Ａ－１	25	ＭＫ２１００４０	０１Ａ	8
ＭＨ２３００３１	０４Ａ－１	21	ＭＫ２２００００	０１Ａ	7
ＭＨ２３００４０	０４Ａ－１	23	ＭＫ２２００１０	０３	31
ＭＨ２３０１００	０４Ａ－１	22	ＭＫ２３０００１	０１Ｂ	17
ＭＨ２３０１１０	０４Ａ－１	19	ＭＫ２３０００１	０３	32
ＭＨ２３０１４０	０４Ｂ	1	ＭＫ２３００１０	０４Ａ－１	28
ＭＨ２３０１５０	０４Ｃ	1	ＭＫ２３００１０	０４Ａ－２	27
ＭＨ２３０１６１	０５	2	ＭＫ２３００２０	０４Ａ－１	27
ＭＨ２３０１７０	０４Ｂ	3	ＭＫ２３００２０	０４Ａ－２	26
ＭＨ２３０１８０	０４Ｂ	2	ＭＫ２３００４０	０４Ａ－１	18
ＭＨ２３０２００	０４Ｂ	28	ＭＫ２３００４０	０４Ａ－２	17
ＭＨ２４００１１	０６－１	15	ＭＫ２３００５０	０４Ａ－１	17

I N D E X

ＬＩＳＴ No.	SECTION №	ITEM	ＬＩＳＴ No.	SECTION №	ITEM
ＭＫ２３００５０	０４Ａ－２	16	ＭＫ３１００８１	０８	3
ＭＫ２３００７１	０４Ｃ	11			
ＭＫ２３００８０	０４Ｃ	12	ＭＫ３２０００１	０１Ｂ	10
ＭＫ２３００９０	０４Ａ－１	16	ＭＫ３３００００	０７	7
ＭＫ２３００９０	０４Ａ－２	15	ＭＫ４８０００１	１０Ｂ	1
ＭＫ２３０１００	０４Ａ－２	28	ＭＫ４８００１１	１０Ｃ	2
ＭＫ２３０１１０	０４Ａ－１	29	ＭＫ４８００２０	１０Ｃ	7
ＭＫ２３０１２０	０３	8	ＭＫ４８００３０	１０Ｂ	8
ＭＫ２３０１３０	０３	2	ＭＫ４８００４０	１０Ｂ	13
ＭＰ２４００１０	０６－１	1	ＭＫ４８００４０	１０Ｃ	15
ＭＫ２４００３１	０６－１	24	ＭＫ４８００５０	１０Ｂ	2
ＭＫ２４００４１	０６－１	25	ＭＫ４８００６０	１０Ｂ	9
ＭＫ２４００５０	０６－１	26	ＭＫ４８００６０	１０Ｃ	10
ＭＫ２４００６０	０６－１	27	ＭＫ４８０３４１	１０Ｃ	17
ＭＫ２５００００	０１Ａ	14	ＭＫ４８０３５０	１０Ｃ	1
ＭＫ２５０２５１	００	7	ＭＫ４８００９１	１０Ｅ	4
ＭＫ２５０２６１	００	6	ＭＫ４８０１０２	１０Ｅ	12
ＭＫ２５０２７０	００	9	ＭＫ４８０１５２	１０Ｄ	7
ＭＫ２５０２８０	００	8	ＭＫ４８０１６２	１０Ｄ	2
ＭＰ２５００００	００	12	ＭＫ４８０３３０	１０Ｃ	20
ＭＫ２５００６０	００	14	ＭＫ４８０２５０	１０Ｄ	1
ＭＫ２５００７０	０７	8	ＭＫ４８０２６０	１０Ｄ	10
ＭＫ２５００８１	０７	13	ＭＫ４８０２７０	１０Ｄ	3
ＭＫ２５００９０	１０Ｃ	18	ＭＫ４８０２８０	１０Ｅ	13
ＭＫ２５０３００	１０Ｂ	14	ＭＫ４８０２９０	１０Ｅ	14
ＭＫ２５０１１１	１０Ｅ	1	ＭＫ４８０３００	１０Ｄ	5
ＭＫ２５０１２１	１０Ｅ	2	ＭＫ４８０３１０	１０Ｄ	8
ＭＫ２５０１３１	０１Ｂ	1	ＭＫ４８０３２０	１０Ｄ	4
ＭＫ２５０１４０	１１	9	ＭＰ７１００００	１２	1
ＭＫ２５０１５０	１１	11	ＭＫ７１００１０	１２	12
ＭＫ２５０１７０	１１	5	ＭＫ７１００２０	１２	1
ＭＫ２５０１８０	１１	12	ＭＫ７３００１３	１０Ａ	3
ＭＫ２５０１９０	０１Ｂ	2	ＭＫ７３００５０	１０Ａ	1
ＭＫ２５０２１０	１１	8	ＭＫ７３００６０	１０Ａ	9
ＭＫ２５０２２０	０４Ｄ	20	ＭＫ７９００００	０１Ｂ	12
ＭＫ２７００００	０２Ａ	15	ＭＭ２７００００	０４Ｃ	19
ＭＫ２７００１０	０２Ａ	4	ＲＤ２３００６０	０４Ａ－２	23
ＭＫ３１０００１	０８	2	ＲＤ２３０１３０	０３	9
ＭＫ３１００１０	０１Ｂ	3	ＲＤ２３０２５０	０５	8
ＭＫ３１００２０	０１Ｂ	5	ＲＤ２３０３７０	０４Ａ－１	9
ＭＫ３１００３０	０１Ｂ	6	ＲＤ２３０３７０	０４Ａ－２	8
ＭＫ３１００４１	０３	13	ＲＤ２３０４８０	０４Ａ－１	2
ＭＫ３１００５０	０３	29	ＲＤ２３０４８０	０４Ａ－２	1
ＭＫ３１００６０	０１Ｂ	14	ＲＤ２３０４９０	０４Ａ－１	3
ＭＫ３１００７１	０１Ｂ	13	ＲＤ２３０４９０	０４Ａ－２	2

I N D E X

ＬＩＳＴ　No.	SECTION №	ITEM	ＬＩＳＴ　No.	SECTION №	ITEM
ＲＤ２４０１５４	０６－１	8	ＲＲ２４０３３０	０６－１	13
ＲＤ２４０１５４	０６－２	5	ＲＲ２４０３３０	０６－２	20
ＲＤ２４０２７１	０４Ｄ	3	ＲＲ２４０３４０	０６－１	14
ＲＤ２７００２０	０２Ｃ	14	ＲＲ２４０３９０	０６－２	12
ＲＤ２７００４０	０２Ｃ	13	ＲＲ２４０５１０	０６－１	9
ＲＶ７１００５０	１２	11	ＲＲ２４０５１０	０６－２	6
ＲＤ７１０３３０	１２	4	ＲＶ２３０２５０	０４Ｂ	30
ＲＤ７１０３４０	１２	3	ＰＧ２４００１０	０６－２	13
ＲＤ７１０３５１	１２	7	ＰＧ２４００４０	０６－２	3
ＲＤ７１０３６１	１２	6	ＲＶ２４００４０	０６－２	14
ＲＤ７１０３７０	１２	2	ＲＶ２４００５０	０６－２	15
ＲＤ７１０３８０	１２	5	ＲＶ２４００６２	０６－２	17
ＲＨ２３０２７１	０３	27	ＲＶ２４００７１	０６－２	24
ＲＨ２３０２８０	０３	26	ＲＶ２４００８１	０６－２	23
ＲＨ２３０３００	０３	25	ＲＶ２４００９１	０６－２	16
ＲＨ２３０３１１	０３	4	ＲＶ２４０１００	０６－２	1
ＲＨ２３０３２０	０３	12	ＲＶ２４０１１０	０６－２	2
ＲＨ２３０３３０	０３	30	ＲＶ２５００７０	０４Ｄ	1
ＲＨ２３０４１０	０４Ａ－１	4	ＳＣ７１００１０	１２	10
ＲＨ２３０４１０	０４Ａ－２	3	Ｐ２４００４０	０６－１	3
ＲＨ２３０４４０	０４Ａ－１	12	ＳＦ２４００６１	０６－１	20
ＲＨ２３０４４０	０４Ａ－２	11	ＳＧ２３０００００	０４Ｂ	29
ＲＨ２３０４５０	０４Ａ－１	14	ＳＧ２３０２２０	０４Ａ－１	8
ＲＨ２３０４５０	０４Ａ－２	13	ＳＧ２３０２２０	０４Ａ－２	7
ＲＨ２３０４６０	０４Ａ－１	13	ＲＲ２３０２４０	０３	23
ＲＨ２３０４６０	０４Ａ－２	12	ＳＧ２３０２６０	０５	3
ＲＨ２３０５４０	０４Ｂ	11	ＳＧ２３０２８０	０４Ｄ	6
ＲＨ２３０５５０	０４Ｂ	10	ＳＧ２３０３００	０４Ｃ	17
ＲＨ２３０６１０	０３	6	ＲＲ２３０２５０	０３	14
ＲＨ２３０８０１	０３	3	ＳＧ２５００６０	０４Ｄ	21
ＲＨ２３０８１０	０３	5	ＳＧ２５０２３０	０４Ｄ	22
ＲＮ２３００１０	０３	15	ＳＧ２７００００	０４Ｄ	11
ＲＮ２３００２０	０３	20	ＳＧ２７００５０	０４Ｃ	20
ＲＮ２３００３０	０３	16	ＳＧ２７００６０	０４Ｃ	22
ＲＮ２３００４０	０３	17	ＳＧ２７００７０	０４Ｃ	23
ＲＲ２３００８０	０４Ｃ	4	ＳＧ２７００８１	０２Ｃ	4
ＲＲ２３００９０	０４Ｃ	2	ＳＧ２７００９０	０２Ｃ	6
ＲＲ２３０１３０	０４Ｂ	18	ＳＧ２７０１１０	０４Ｃ	26
ＲＲ２３０１４０	０４Ｂ	20	ＳＧ２７０１２０	０４Ｃ	25
ＲＲ２３０１５０	０４Ｂ	19	ＳＧ２７０１３０	０４Ｄ	10
ＲＲ２４０２８０	０６－１	4	ＳＧ２７０１４０	０４Ｄ	7
ＲＲ２４０３００	０６－１	5	ＳＧ２７０１８０	０４Ｄ	13
ＲＲ２４０３００	０６－２	8	ＳＪ２２００１０	０１Ａ	19
ＲＲ２４０３１０	０６－１	11	ＰＧ２４００２０	０６－２	21
ＲＲ２４０３２０	０６－１	12	ＳＪ２７００１０	０２Ａ	7

I N D E X

ＬＩＳＴ　No.	SECTION №	ITEM	ＬＩＳＴ　No.	SECTION №	ITEM
ＳＪ２７００２０	０２Ａ	8			
ＳＪ２７００３０	０２Ａ	11			
ＳＪ２７００４０	０２Ａ	9			
ＳＪ２７０１１０	０２Ａ	23			
ＳＪ２７０１２０	０２Ａ	6			
ＳＪ３２００１０	０１Ｂ	11			
ＳＬ２３０００１	０４Ａ－２	24			
ＳＬ２３００２１	０４Ａ－２	25			
ＳＬ２３００３１	０４Ａ－２	20			
ＳＬ２３００４０	０４Ａ－２	18			
ＳＬ２３００７０	０４Ａ－２	22			
ＳＬ２３００８０	０４Ａ－２	21			
ＳＬ２３００９０	０４Ａ－２	30			
ＳＬ２３０１４０	０４Ａ－２	29			
ＰＧ２５００００	０４Ｄ	2			
ＳＬ２７００００	０４Ｄ	16			
ＳＬ２７００１０	０４Ｄ	17			
ＳＬ２７００２０	０４Ｄ	19			
ＳＬ２７００３０	０４Ｄ	18			
ＳＬ２７００４０	０４Ｄ	15			