Barudan

HIGH SPEED AUTOMATIC EMBROIDERY MACHINE

BEDSHE-ZQ-BS

PARTS LIST

BEDSHE-ZQ-BS

HIGH SPEED AUTOMATIC EMBROIDERY MACHINE

CONTENTS

00A Table·Frame A

00B Table·Frame B

01A Head·Bed A

01B Head·Bed B

02A Thread cut A

02B Thread cut B

02C Thread cut C

03 Take up lever

04A Needle bar A

04B Needle bar B

04C Needle bar C

04D Needle bar D

04E Needle bar E

05 Jump

06 Thread guide

07 Color change

10A Pantograph drive A

10B Pantograph drive B

10C Pantograph drive C

10D Pantograph drive D

10E Pantograph drive E

10F Pantograph drive F

11A Control A

11B Control B

12 Accessories

INDEX

Machine layout (BEDSHE-ZQ-BS)

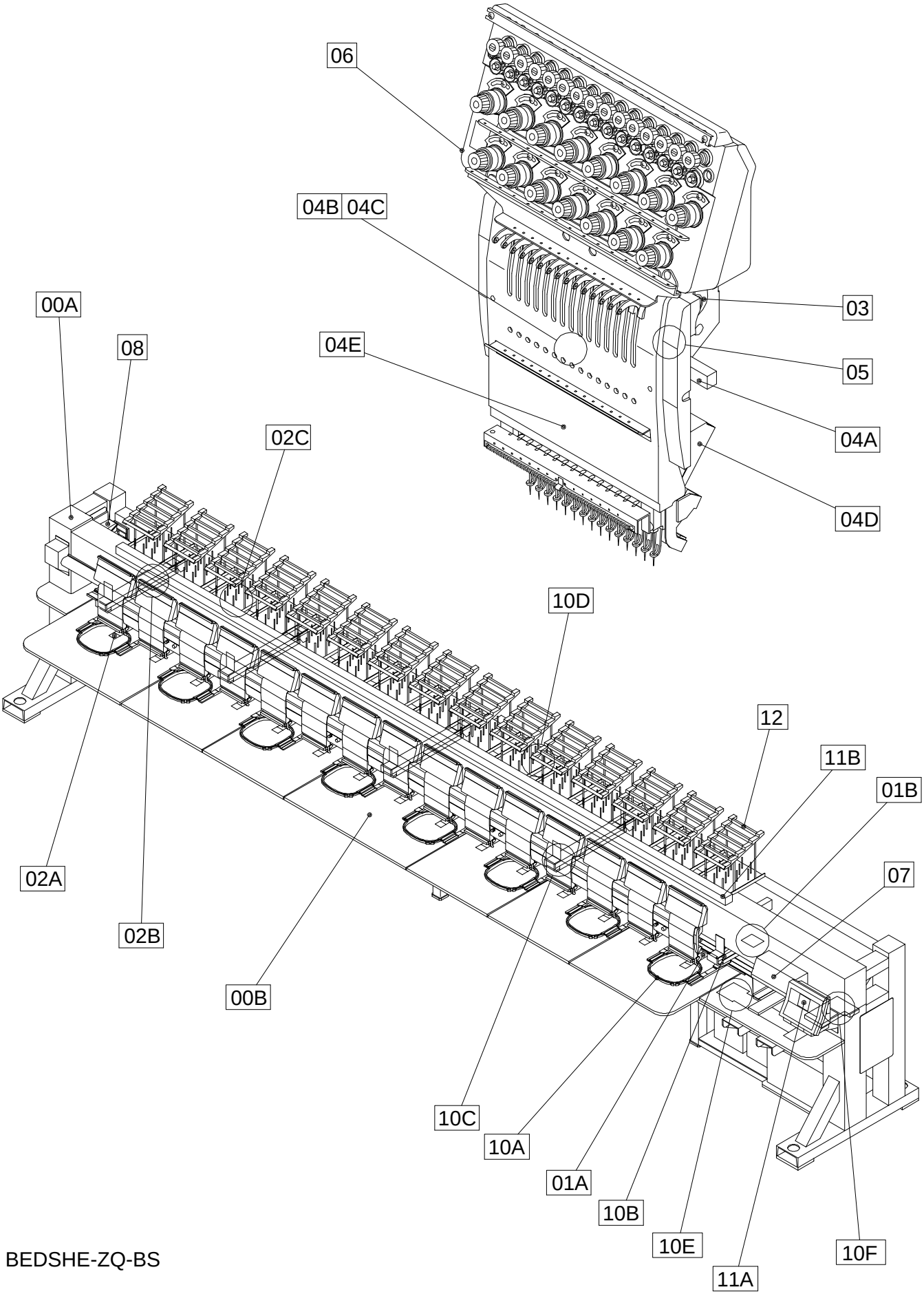

BEDSHE-ZQ-BS

030513

00A Table\Frame A

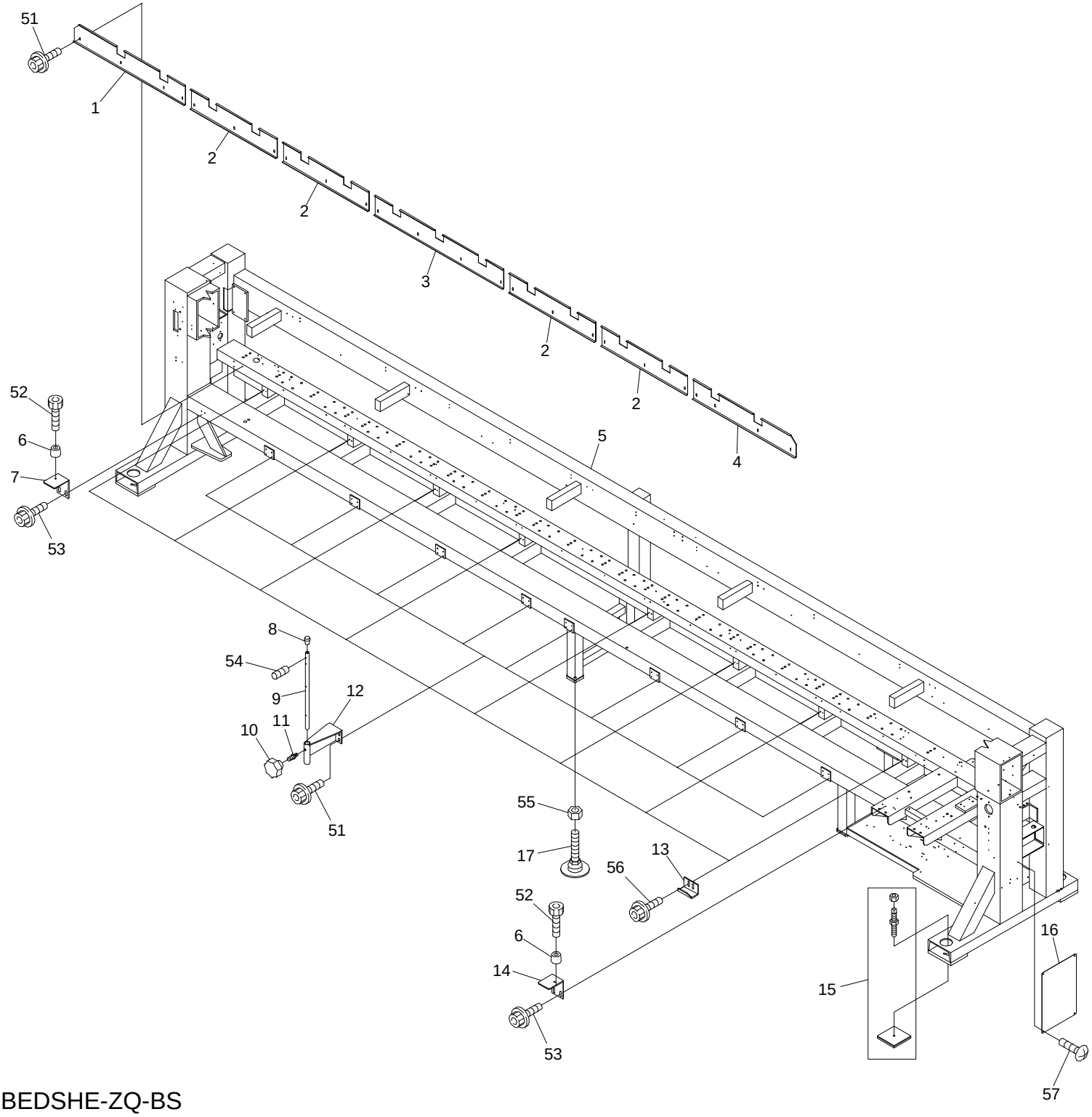

00A Table - Frame A ** Depends on machine type

ITEM	LIST NO.	DESCRIPTION	Q'TY	NOTE
1	SM140100	Bed front cover(No.4)	1	**
2	SM140080	Bed front cover(No.2)	4	**
3	SM140090	Bed front cover(No.3)	1	**
4	SM140070	Bed front cover(No.1)	1	**
5	1ASM15380380AH0	Frame a'ssy BEDSHE-B15S,450×380/380	1	**
	1ASM12450450AH1	Frame a'ssy BEDSHE-B12S,450×450/450	1	**
	1ASM12520520AH1	Frame a'ssy BEDSHE-B12S,450×520/520	1	**
6	A9014163	Color rubber foot(C-30-FRB-3225)	2	**
7	SM140050	Support table catch stay(L)	1	
8	A9014161	Rubber foot for pipes(C-31-5)	8	
9	SJ140120	Table stand(DYHE)	8	
10	A9014162	Seven lobe knob(KSF-40-M8)	8	
11	SC140180	Knob bolt	8	
12	SJ140130	Table stand bracket	8	
13	SC140120	Table stopper	8	
14	SM140040	Support table catch stay(R)	1	
15	SM720001	Mount set	1	
16	SM250000	Stand cover(R)	1	
17	A9019075	Flexible lebeler(TM256-5)	2	
51		Hex.socket flange bolt M6×12(Uni chrome)		
52		Hex.socket bolt M5×15(With adhesive)		
		Black(Screw lock red)		
53		Hex.socket flange bolt M6×12		
54		Hex.socket set screw M5×20		
55		Hex.nut M16		
56		Hex.socket flange bolt M5×10(Uni chrome)		
57		Truss screw M5×10		

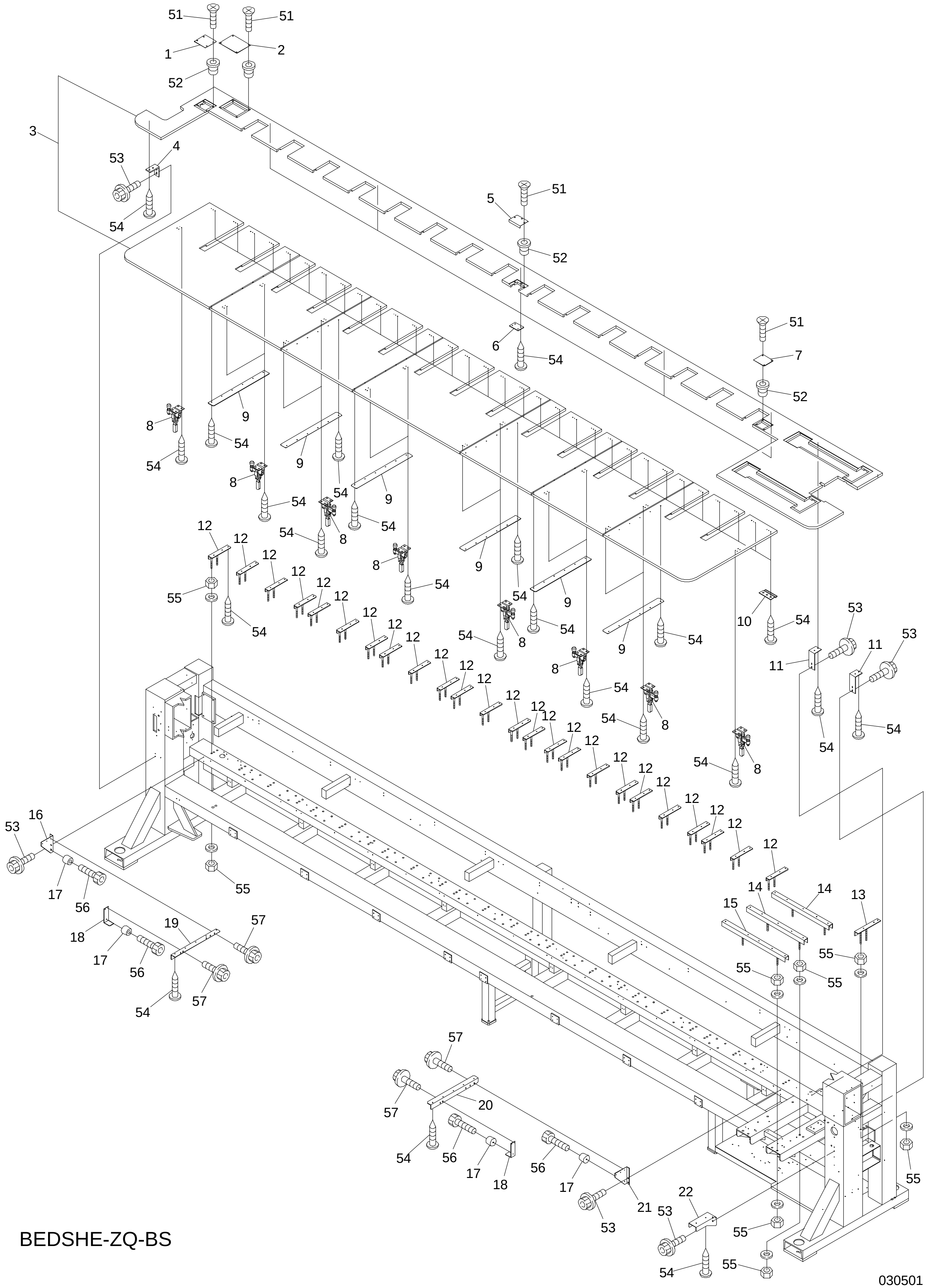
51
51
1
2
52
3
4
53
54
5
51
52
6
54
51
7
52
8
9
54
10
11
12
13
14
15
16
17
18
19
20
21
22
55
56
57

BEDSHE-ZQ-BS

00B Table- Frame B ** Depends on machine type

ITEM	LIST NO.	DESCRIPTION	Q'TY	NOTE
1	SM120010	Lower connecting service cover(Left)	1	
2	SC120030	Thread cut service cover	1	
3	1BSM15380380AH0	Table BEDSHE-B15S 450×380/380	1	**
	1BSM12450450AH1	Table BEDSHE-B12S,450×450/450	1	**
	1BSM12520520AH1	Table BEDSHE-B12S,450×520/520	1	**
4	SC140090	Table support angle	1	
5	SM120000	Lower connecting service cover(Center)	1	
6	RQ120080	Jointed plate	5	**
7	SC120040	Encoder service cover	1	
8	A9013070	Toggle clamp(KAKUTA No.40A)	14	**
9	SC120010	Joint plate	6	**
10	HM140120	Table stopper(Front)	32	**
11	SM140030	Table support angle	2	
12	SC140140	Table support(L=200)	24	**
13	SM140000	Table support(240L)	1	
14	SM140010	Table support(610L)	2	
15	SM140020	Table support(670L)	1	
16	SJ140010	LH-table support bracket(DYHE)	1	
17	A9014163	Color rubber foot(C-30-FRB-3225)	4	
18	SC140041	Table support stay	2	
19	SC140030	LH-table support	1	
20	SC140020	RH-table support	1	
21	SJ140000	RH-table support bracket(DYHE)	1	
22	SM140060	Table support bracket	1	
51		Flush screw(Under cut) M4×8		
52		Rag nut(C) M4		
53		Hex.socket flange bolt M6×12(Uni chrome)		
54		Pierce screw M5×19		
55		Hex.nut M10		
56		Hex.socket bolt M5×15(With adhesive)		
		Black(Screw lock red)		
57		Hex.socket flange bolt M5×10(Uni chrome)		

01A Head\Bed A

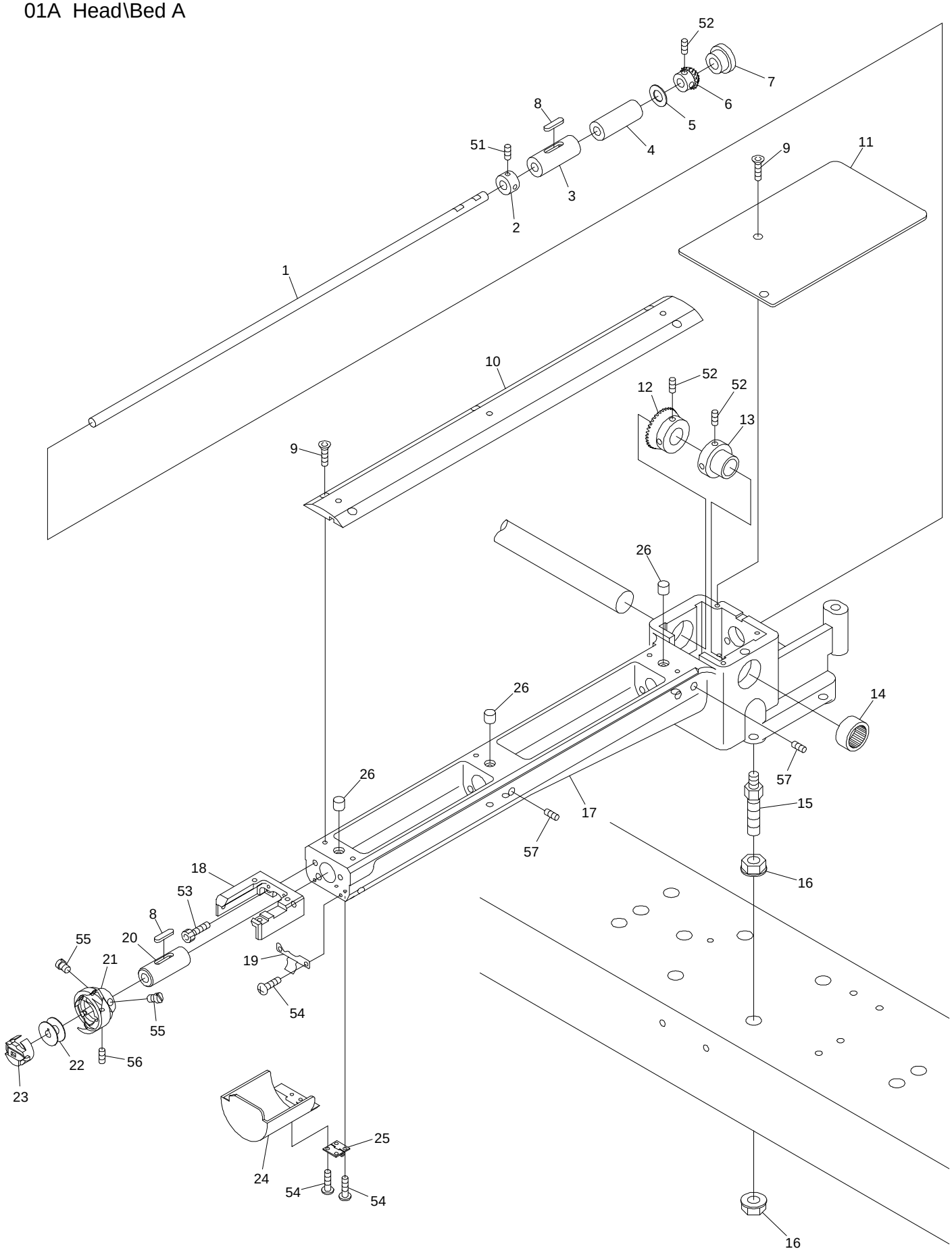

01A Head - Bed A (H=Head Q'TY)

ITEM	LIST NO.	DESCRIPTION	Q'TY	NOTE
1	HS210021	Lower shaft	H×1	Small bobbin
	HS210020	Lower shaft	H×1	Middle bobbin
2	KF220290	Lower shaft collar	H×1	
3	KF220230	Lower shaft metal(Front)	H×1	
4	HS220010	Lower shaft metal(Cylinder back side)	H×1	
5	HT220061	Thrust washer (Lower shaft)	H×1	
6	SJ220010	Lower shaft gear(Small gear,Korean)	H×1	
7	A9014059	Gromet MG(MG-1)	H×1	
8	KL220140	Oil felt C(5×25×20)	H×2	
9	KX250080	Throat plate set screw(Hex.socket)	H×7	
10	SJ210120	Cylinder bed cover,correspond barrel frame	H×1	
11	HS210042	Bed cover	H×1	
12	SJ320010	Lower shaft gear(Large gear,Korean)	H×1	
13	HP321090	Lower shaft connecting shaft collar	H×1	
14	A9011111	Needle bearing(TLA-2012Z)	H×1	
15	SC210000	Adjust bolt	H×4	
16	SC210010	Adjust nut M10	H×8	
17	SJ210090	Barrel bed(Small bobbin) correspond barrel frame	H×1	Small bobbin
	SJ210150	Barrel bed R-type(Middle bobbin) correspond barrel frame	H×1	Middle bobbin
18	SJ210080	Throat plate base,correspond barrel frame	H×1	
19	KC250482	Barrel bed cover hold spring	H×1	
20	KF220240	Vertical shaft metal(Upper)	H×1	
21	KF220700	Rotating hook HSL-ATR(M1QTS)	H×1	Small bobbin
	KF221040	Middle bobbin for automatic feed oil HSM-A(MQ2L)	H×1	Middle bobbin
22	KF220530	Bobbin	H×1	Small bobbin
	KF220421	Bobbin (HSM)(DBM)(For aluminum,middle bobbin)	H×1	Middle bobbin
23	KF221020	Bobbin case(4B19-S6-BA)	H×1	Small bobbin
	KF220302	Bobbin case BC-DBM(Z2)-NBL5 middle bobbin	H×1	Middle bobbin
24	HS210031	Barrel bed cover(Short type)	H×1	
25	A9012027	Hinge(TH-TN-72)	H×1	
26	KL220120	Oil felt A	H×1	
51		Hex.socket set screw SM1/4 40×4		
52		Hex.socket set screw M5×6		
53		Hex.socket bolt M5×15		
54		Pan screw M3×6		
55		Screw(SM11/64 40×5)		
56		Set screw(SM11/64 40×5)		

01B Head\Bed B

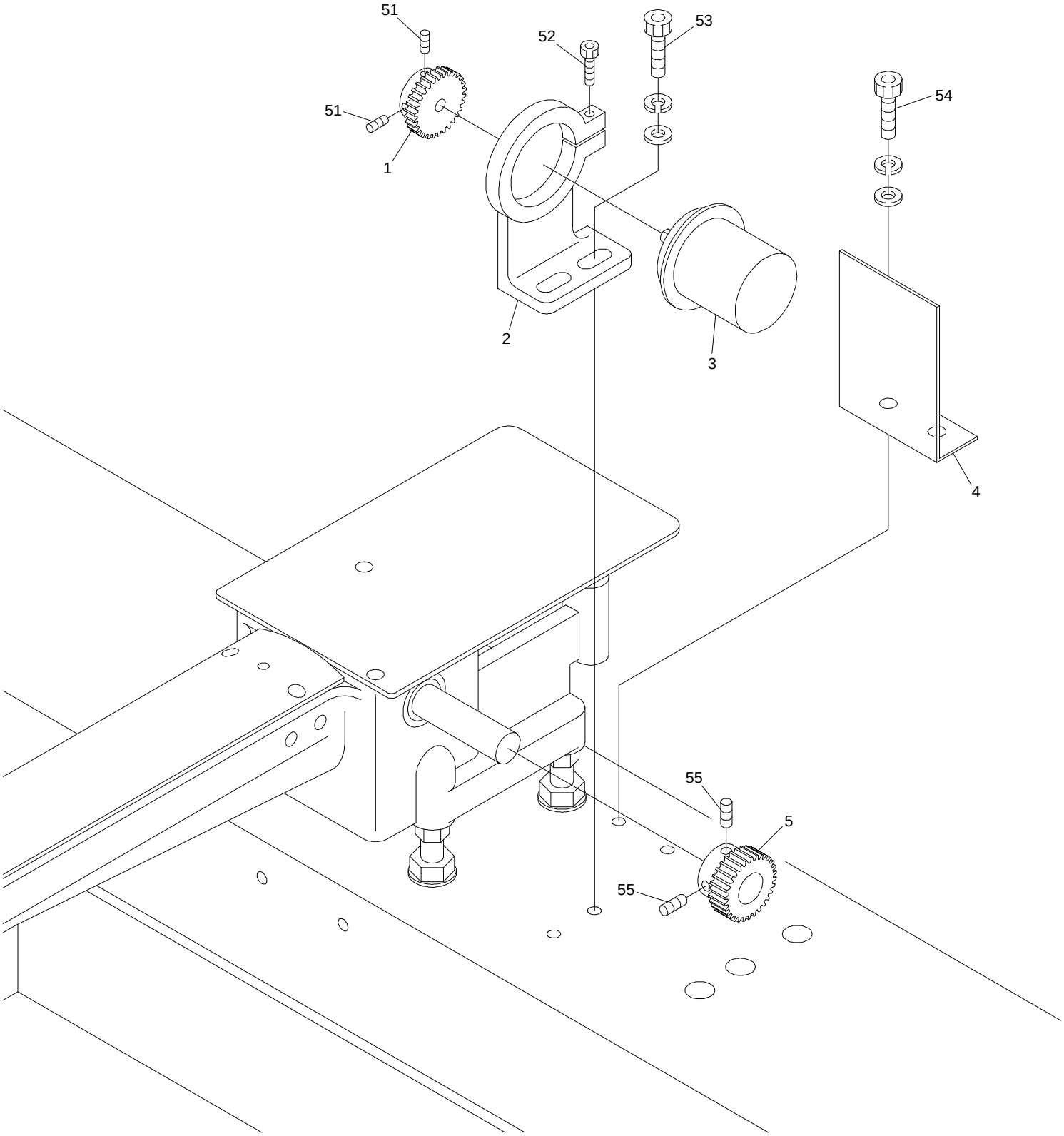

BENYHE-YN-C BEDYHE-YN-C BEDSHE-ZQ-BS BENYHE-ZQ-C BEDYHE-Z12/ZQ-C
BENBHE-YN-C BENBHE-ZQ-C

030430

01B Head - Bed B

ITEM	LIST NO.	DESCRIPTION	Q'TY	NOTE
1	HP321720	Encoder driving gear No.2	1	
2	SC330130	Encoder retainer	1	
3	KN511020	Position coder TS5307N54	1	
4	SC250080	Encoder safety cover	1	
5	HP321710	Encoder driving gear No.1	1	
51		Hex.socket set screw M4×8		
52		Hex.socket bolt M4×18		
53		Hex.socket bolt M6×25		
54		Hex.socket bolt M6×15		
55		Hex.socket set screw M5×5		

02A Thread cut A

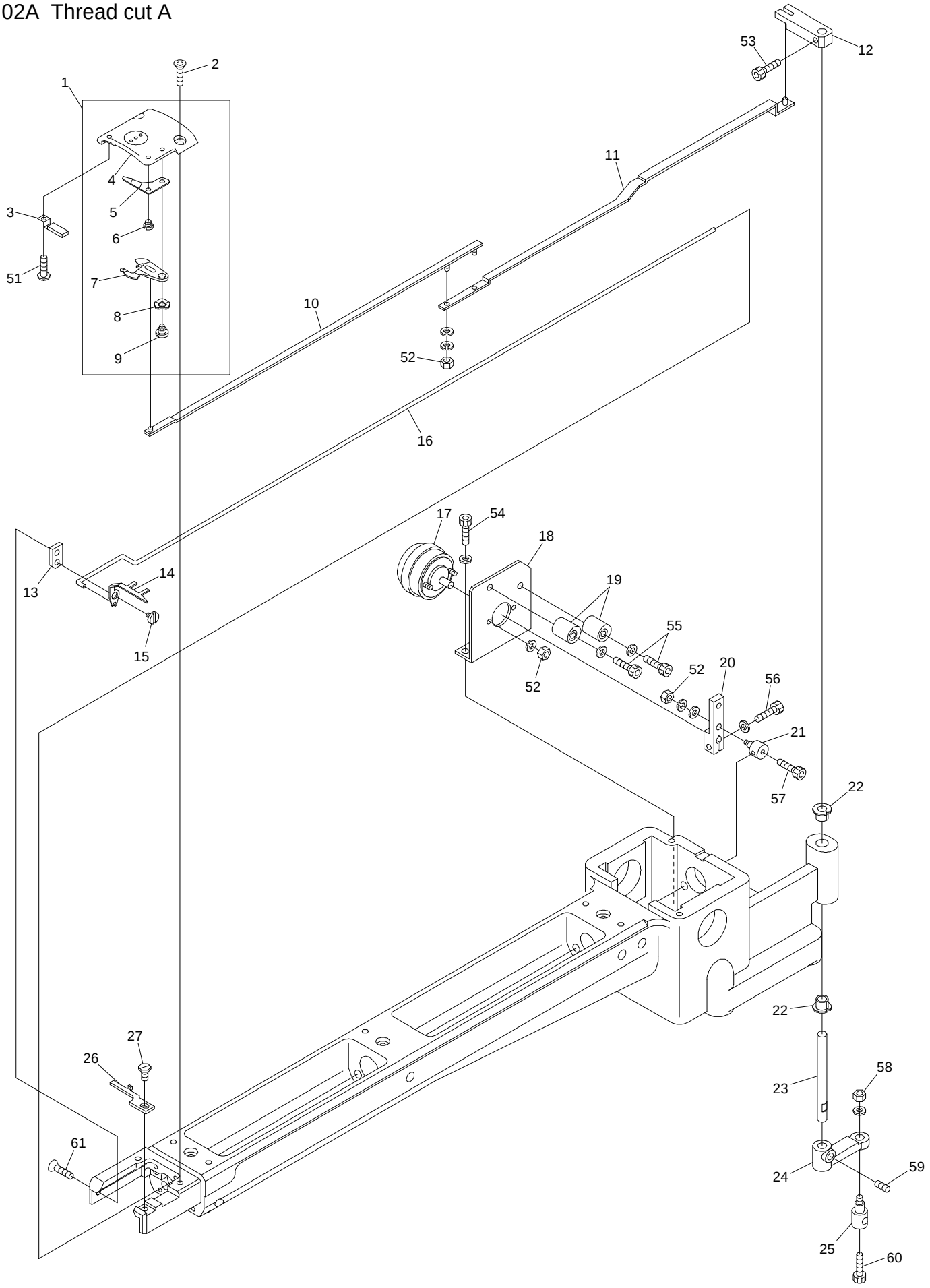

02A Thread cut A

ITEM	LIST NO.	DESCRIPTION	Q'TY	NOTE
1	SJ270010	Throat plate a'ssy (Barrel frame correspondence)	H×1	
2	KX250080	Throat plate set screw(Hex.socket)	H×2	
3	HT270181	Lower thread support stay(Cylinder) CMP	H×1	
4	SJ270020	Cylinder throat plate Barrel frame correspondence	H×1	
5	SJ270040	Fixed knife barrel frame correspondence	H×1	
6	KX270010	Fixed knife set screw	H×1	
7	SJ270030	Driving knife barrel frame correspondence	H×1	
8	A9013066	Wave washer(WW5)(SK)	H×1	
9	KN272010	Lower thread knife rotary shaft	H×1	
10	HS210111	Lower thread knife drive rod A	H×1	
11	HS210121	Lower thread knife drive rod B	H×1	
12	HS210100	Lower thread knife drive lever upper	H×1	
13	HS210051	Hook fixed stay(Short type)	H×1	
14	HS210300	Hook(Cylinder MK5)	H×1	
	HS210142	Hook(For middle bobbin)	H×1	
15	KC271001	Upper thread knife rotary shaft	H×1	
16	HS210070	Hook drive rod	H×1	
17	A9056030	Rotary solenoid 3ER25-35×3×8×9 M960371R(ETL)	H×1	
18	SJ210040	Solenoid stay(Short small bobbin)	H×1	
	HS210060	Solenoid stay(For middle bobbin)	H×1	
19	KN272401	Stopper eccentric	H×2	
20	KC271940	Soleroid lever A	H×1	
21	HS210080	Connecting clamp	H×1	
22	A9011173	DU bush with flange(MB0606-12FDU)	H×2	
23	HS210090	Knife lever rotary shaft	H×1	
24	KN271560	Knife lever	H×1	
25	HM270000	Connecting bar clamp	H×1	
26	KX270000	Rotating hook bobbin case holder position bracket	H×1 H×1	
27	KX270430	Screw(Cylinder)	H×1	
51		Pan screw M3×3		
52		Hex.nut M3		
53		Hex.socket bolt M4×6		
54		Hex.socket bolt M4×8(With plain washer)		
55		Hex.socket bolt M4×18		
56		Hex.socket bolt M4×10		
57		Hex.socket bolt M3×5		
58		Hex.nut M4		
59		Hex.socket set screw M5×6		
60		Hex.socket bolt M4×8		
61		Hex.socket flush screw M4×6		

02B Thread cut B

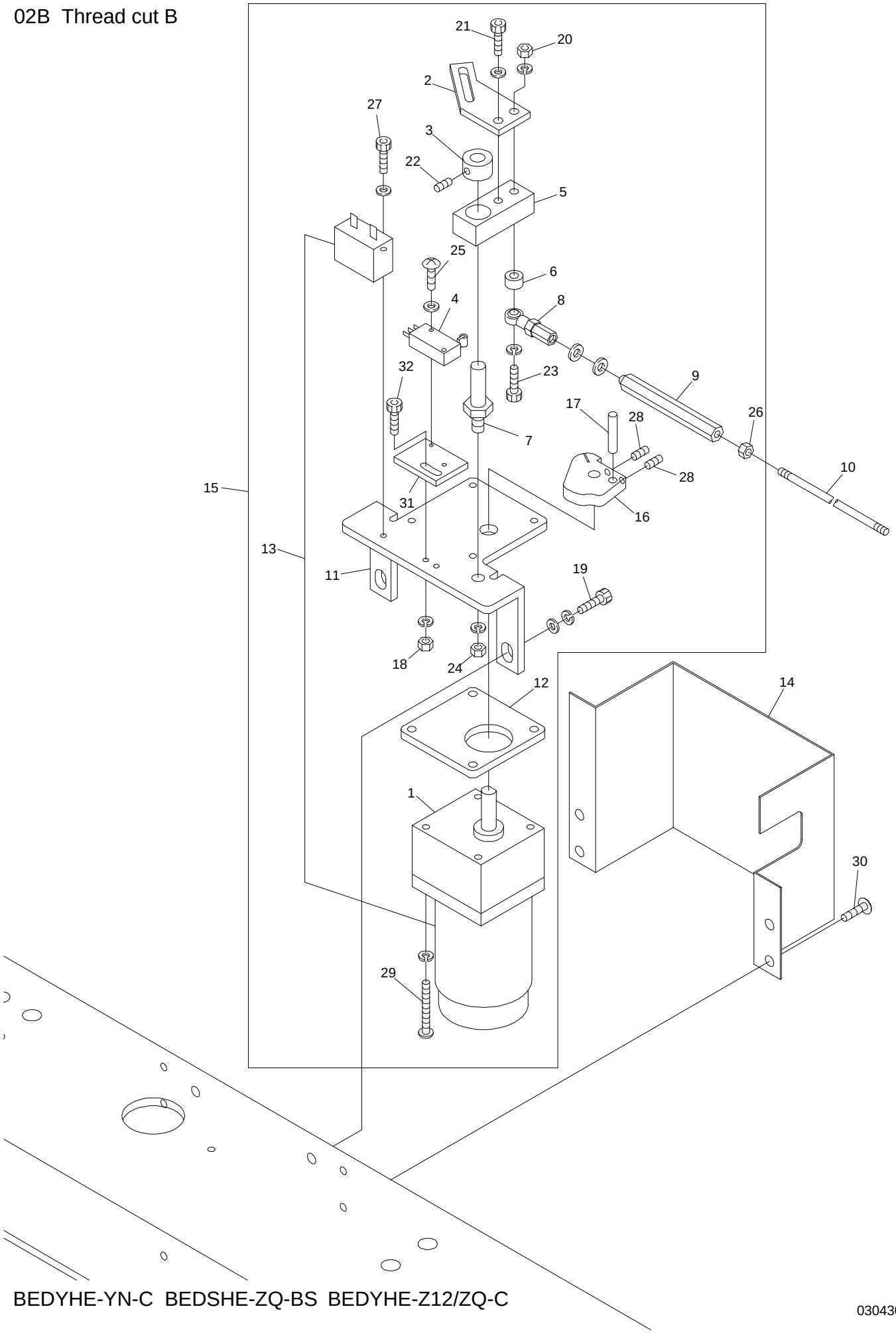

BEDYHE-YN-C BEDSHE-ZQ-BS BEDYHE-Z12/ZQ-C

030430

02B Thread cut B

ITEM	LIST NO.	DESCRIPTION	Q'TY	NOTE
1		Condenser(CH45UL)	1	Motor accessory
2	HS270030	Motor cam lever	1	
3	KC330180	Collar f10	1	
4	A9052078	Micro switch(D2VW-01L2A-1)	1	
5	KN271782	Drive lever	1	
6	HM270010	Motor lever collar	1	
7	KN271750	Motor lever rotary shaft	1	
8	A9012002	Uniball joint(PR-6)	1	
9	KC330510	Hex.connecting rod(Large)	1	
10	KC330410	Lock connecting rod(2M)	3	
11	SJ270070	Thread cutter motor bracket (Barrel frame correspondence)	1	
12	SJ270080	Motor spacer(Barrel frame correspondence)	1	
13	A9065092	Reversible motor 3RJ10GB-AUL-E4	1	
14	SJ250060	Thread cutter central drive cover (Barrel frame correspondence)	1	
15	SJ270050	Thread cutter central drive a'ssy MK5 (Barrel frame)	1set	
16	SJ270090	Drive cam(Barrel frame correspondence)	1	
17	KN272350	Drive pin	1	
18		Hex.nut M3		
19		Hex.socket bolt M8×20		
20		Hex.nut M6		
21		Hex.socket bolt M6×12		
22		Hex.socket set screw M5×6		
23		Hex.socket bolt M6×55		
24		Hex.nut M8		
25		Truss screw M3×15,M3×20		
26		Hex.nut M5		
27		Hex.socket bolt M4×10		
28		Hex.socket set screw M5×6		
29		Pan screw M5×65		
30		Truss screw M6×10		
31	HS270070	Switch fixed bracket(Cylinder)		
32		Hex.socket bolt M4×12		
33	A9065107	Gear head 3GB36K	1	
	A9053082	Thread cutter motor cable 0.75×6×4M	1	

02C Thread cut C

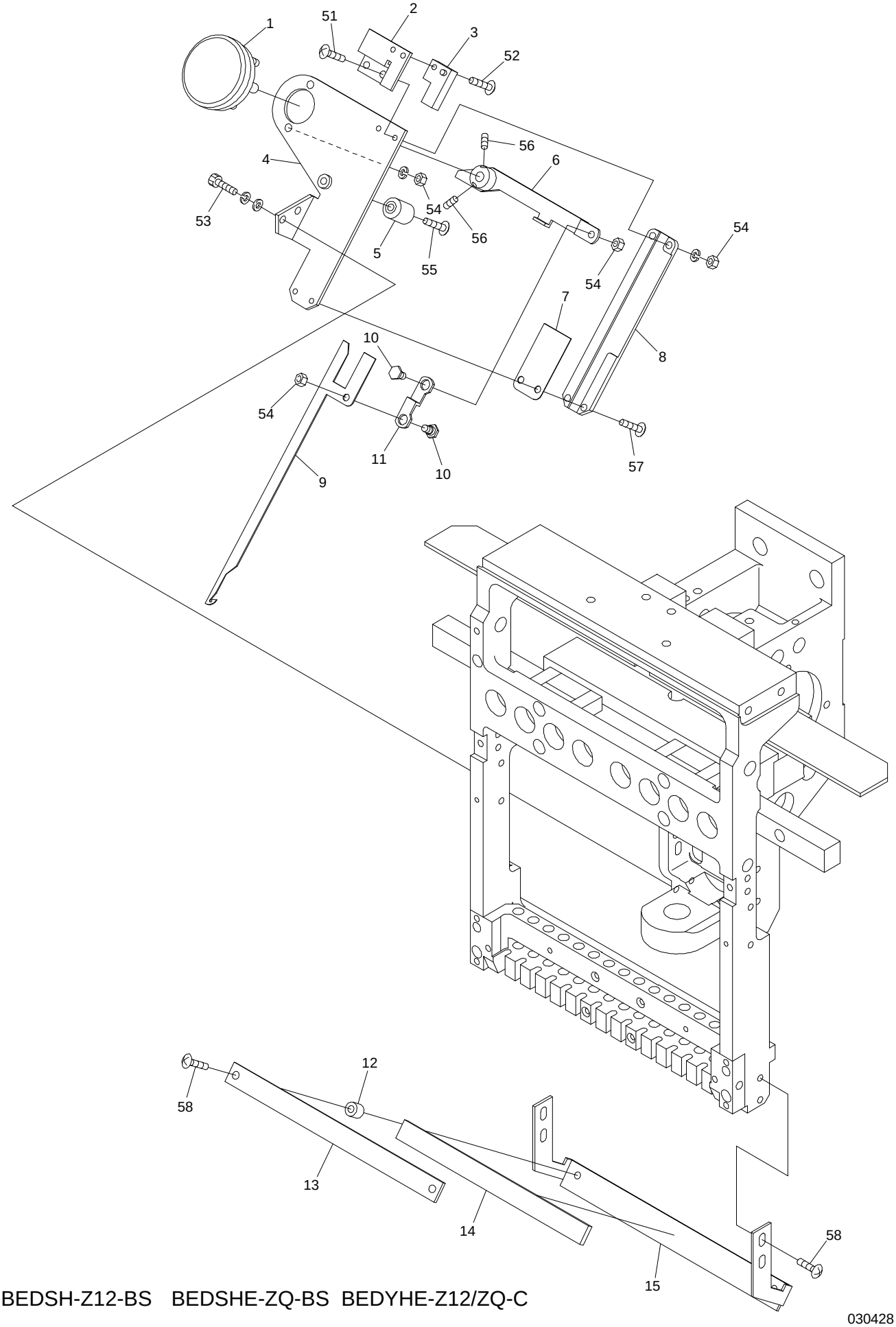

BEDSH-Z12-BS BEDSHE-ZQ-BS BEDYHE-Z12/ZQ-C

030428

02C Thread cut C

ITEM	LIST NO.	DESCRIPTION	Q'TY	NOTE
1	A9056038	Rotary solenoid 4ER45-33×3×8×9 (ETL)	H×1	
2	KL270260	Switch stay	H×1	
3	A9052028	Proximity switch(RS-603)	H×1	
4	SG270081	Thread away base	H×1	
5	KN272401	Stopper eccentric	H×1	
6	SG270090	Thread away solenoid lever	H×1	
7	KL270450	Hook guide plate	H×1	
8	KL270091	Thread away hook guide	H×1	
9	KL270101	Thread away hook	H×1	
10	KL270131	Lever connecting pin	H×2	
11	KL270120	Connecting plate	H×1	
12	KX270070	Thread guard disk spacer	H×2	
13	SG270040	Thread guard disk bracket upper	H×1	Z12
	LA270080	Thread guard disk bracket upper	H×1	ZQ
14	SG270100	Napped plate	H×1	Z12
	RD270020	Napped plate	H×1	ZQ
15	SG270030	Thread guard disk bracket(Z12)	H×1	Z12
	LA270080	Thread guard disk bracket(ZQ-A)	H×1	ZQ
51		Truss screw M3×10		
52		Truss screw M3×6(With plain washer)		
53		Hex.socket bolt M4×12(Spring washer)		
54		Hex.nut M4(With spring washer)		
55		Truss screw M4×16		
56		Hex.socket set screw M4×8		
57		Truss screw M3×8		
58		Truss screw M4×8		

03 Take up lever

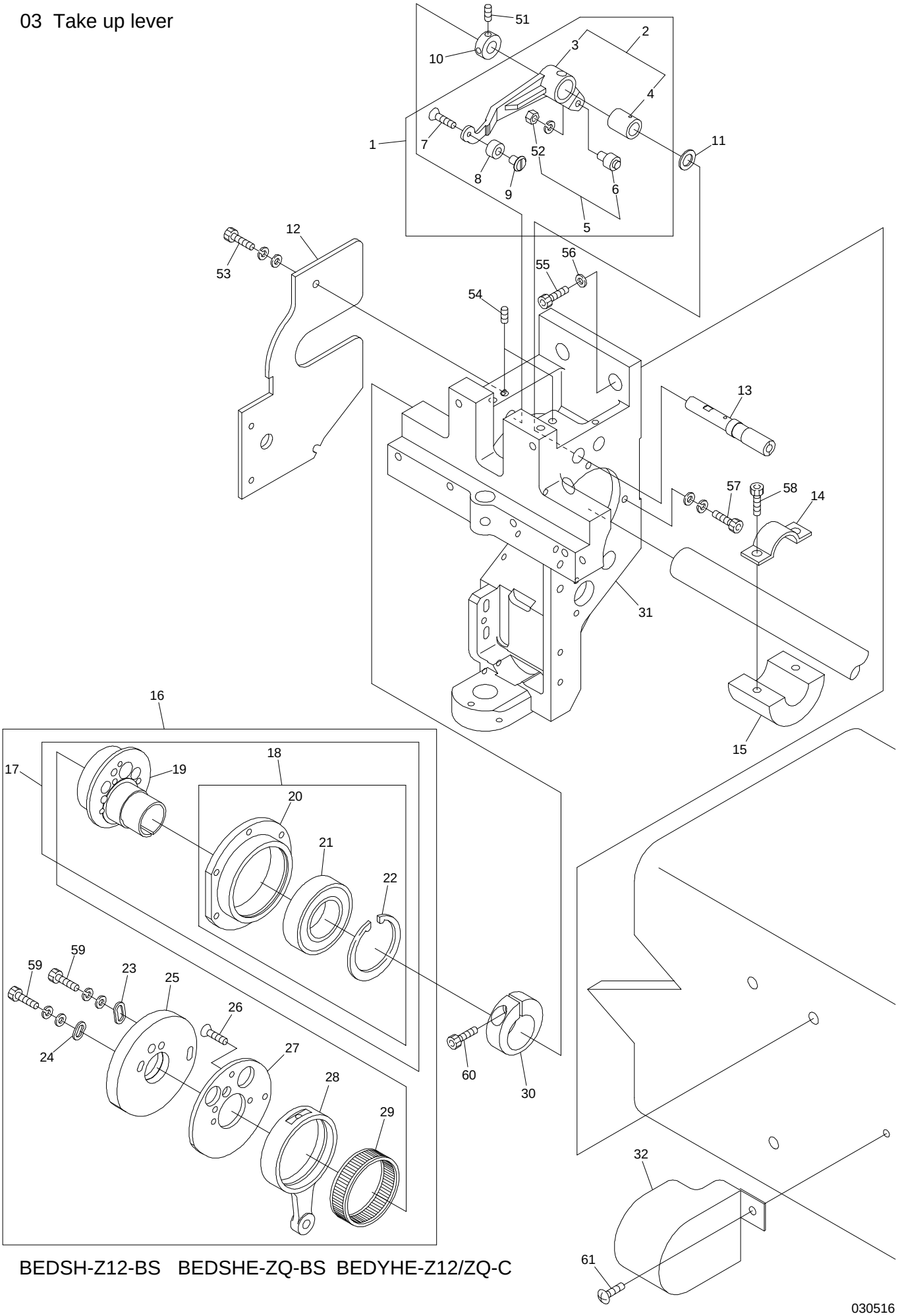

BEDSH-Z12-BS BEDSHE-ZQ-BS BEDYHE-Z12/ZQ-C

030516

03 Take up lever

ITEM	LIST NO.	DESCRIPTION	Q'TY	NOTE
1	RV230070	Take up lever driving lever a'ssy	H×1	
2	RH230801	Take up lever driving lever(Metal)	H×1	
3	RH230311	Take up lever driving lever	H×1	
4	RH230810	Take up lever metal	H×1	
5	KF230501	Take up lever roller a'ssy	H×1	
6	KF230680	Cam followers(KR×4×7.9×15-1P×1)	H×1	
7	HB230650	Flush screw(With adhesion)	H×1	
8	RV230060	Take up lever driving roller	H×1	
9	RD230130	Take up lever driving roller shaft	H×1	
10	HB230800	Take up lever driving lever fixing pin set collar	H×1	
11	RH230610	Thrust washer	H×1	
12	SL230130	Arm reinforcement bracket	H×1	
13	RH230320	Take up lever driving lever fixing pin	H×1	
14	RR320030	Balancer set plate(For f20 shaft)	H-2	DSH
15	RR320020C	Balancer for f20 shaft	H-2	DSH
16	SG230350	Take up lever?Needle bar drive a'ssy	H×1	
17	RN230010	Needle bar driving cam a'ssy	H×1	
18	RN230030	Bearing case a'ssy	H×1	
19	RN230020	Needle bar driving cam(Eccentric 9.2 f20)	H×1	
20	RN230040	Bearing case	H×1	
21	A9010073	Ball bearing(6005ZZ)	H×1	
22	A9012421	C-ring for hole f47	H×1	
23	HB230080	Washer for cam(2)	H×1	
24	HB230070	Washer for cam(1)	H×1	
25	SG230340	Take up lever cam H6RN(f20)	H×1	
26	HB230620	Flush screw	H×3	
27	RH230300	Take up lever cam base	H×1	
28	RH230280	Needle bar crank rod	H×1	
29	RH230271	Needle bearing	H×1	
30	RH230330	Needle bar driving cam set collar	H×1	
31	SL210080	Arm	H×1	
32	SM250140	Side cover(First head)	1	
51		Hex.socket set screw M4×4(With adhesion)		
52		Hex.nut M4(With spring washer)		
53		Hex.socket bolt M4×10(With washers)		
54		Hex.socket set screw M5×5		
55		Hex.socket bolt M8×25		
56		Disc spring 8		
57		Hex.socket bolt M4×15(With washers)		
58		Hex.socket bolt M5×15		DSH
59		Hex.socket bolt M4×8		
60		Hex.socket bolt M5×18		
61		Truss screw M5×8		

04A Needle bar A

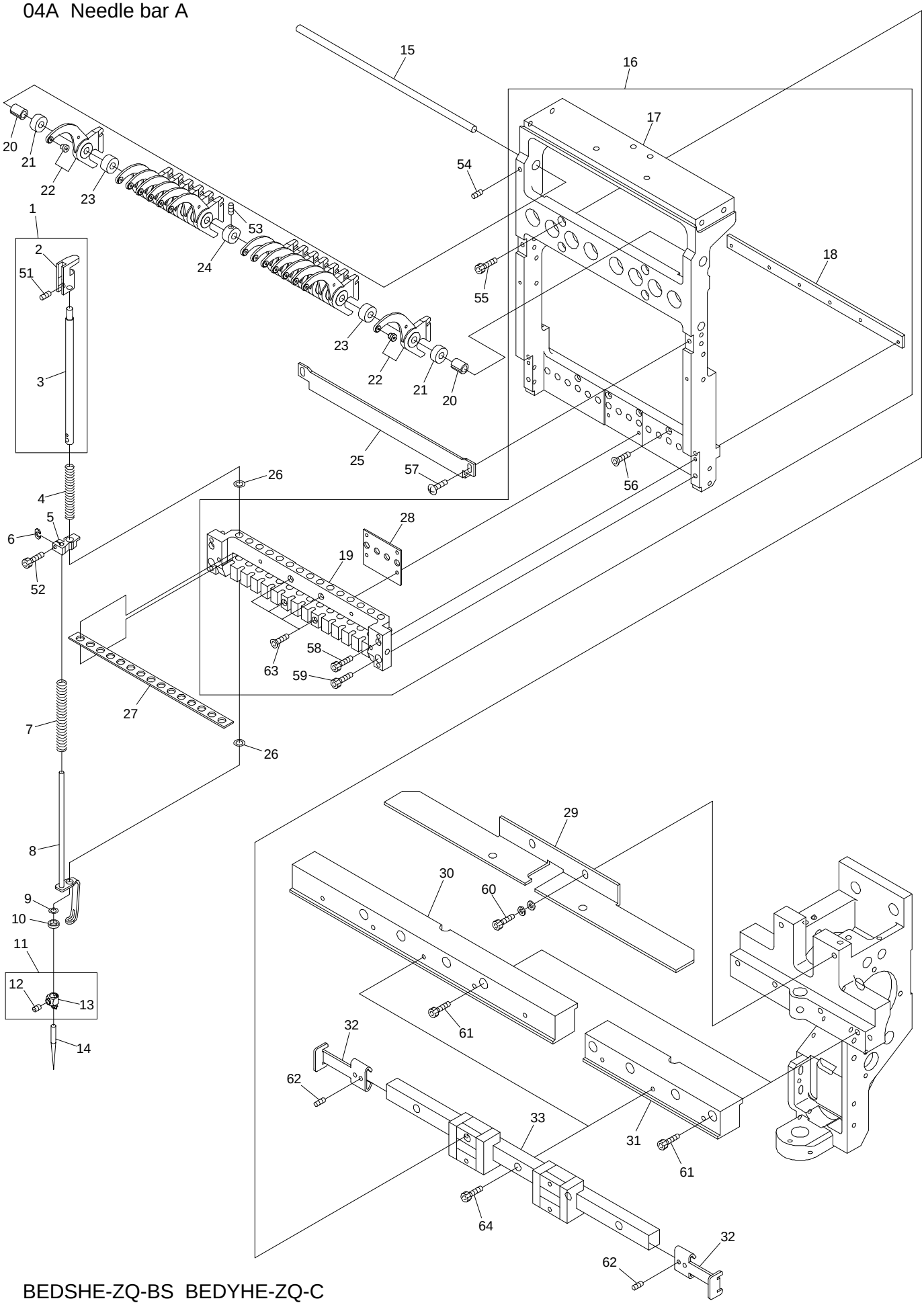

BEDSHE-ZQ-BS BEDYHE-ZQ-C

04A Needle bar A

ITEM	LIST NO.	DESCRIPTION	Q'TY	NOTE
1	RD230480	Needle bar a'ssy	H×15	
2	RD230490	Needle bar guide	H×15	
3	RH230410	Needle bar	H×15	
4	KV230040	Needle bar spring(Upper,for thick type)	H×15	
5	HT230330	Cloth hold set clamp	H×15	
6	HT230263	Washer for set clamp	H×15	
7	SG230220	Needle bar spring lower	H×15	
8	RD230370	Cloth hold(ZQ4)	H×15	
9	KF230910	O-ring(AN6227-5)	H×15	
10	HT230120	Washer 2.4	H×15	
11	RH230440	Needle clamp(With hook,set screw)	H×15	
12	RH230460	Needle clamp screw	H×15	
13	RH230450	Needle clamp(With hook)	H×15	
14	FN070011SNY	Needle(DBXK5-NY11S)	H×15	
15	SL230070	Take up lever shaft(ZQ6)	H×1	
16	SL230001	Slide block set(ZQ6)	H×1-1	Except for 1st head
	SL230011	Slide block set (For color change connecting head)	1	1st head
17	SL230021	Slide block	H×1	
18	RD230060	Bearing plate	H×1	
19	SL230031	Needle bar base	H×1	
20	SG230200	Take up lever collar(Z12)	H×2	
21	SG230230	Take up lever spacer(t=6.1)	H×2	
22	KX230152	Take up lever(ZN multi)	H×15	
23	KX230141	Take up lever spacer	H×13	
24	RD230201	Take up lever spacer collar	H×1	
25	SL230040	Needle bar stocker(ZQ6)	H×1	
26	A9014167	O-ring SS065	H×30	
27	SL230080	Needle bar felt	H×1	
28	SL230090	Slide block sim	H×1	
29	RV230180	Take up lever stocker	H×1	
30	SL230160	Base plate(For color change head)	1	1st head
31	SL230150	Base plate	H-1	Except for 1st head
32	SL230170	Slide block stopper	6	Machine carrying only
33	SL230140	LM-guide(ZQ6)	H×1	
51		Hex.socket double point screw M4×4		
52		Hex.socket bolt M3×8		
53		Hex.socket set screw M4×4		
54		Hex.socket set screw M4×8		
55		Hex.socket bolt M4×10		
56		Hex.socket flush screw M3×14		
57		Truss screw M4×8		
58		Hex.socket bolt M3×35		
59		Hex.socket bolt M4×12		
60		Hex.socket bolt M5×15(With washers)		
61		Hex.socket bolt M5×14		
62		Hex.socket set screw M4×6		
63		Hex.socket flush bolt M3×25		
64		Hex.socket bolt M4×14		

04B Needle bar B

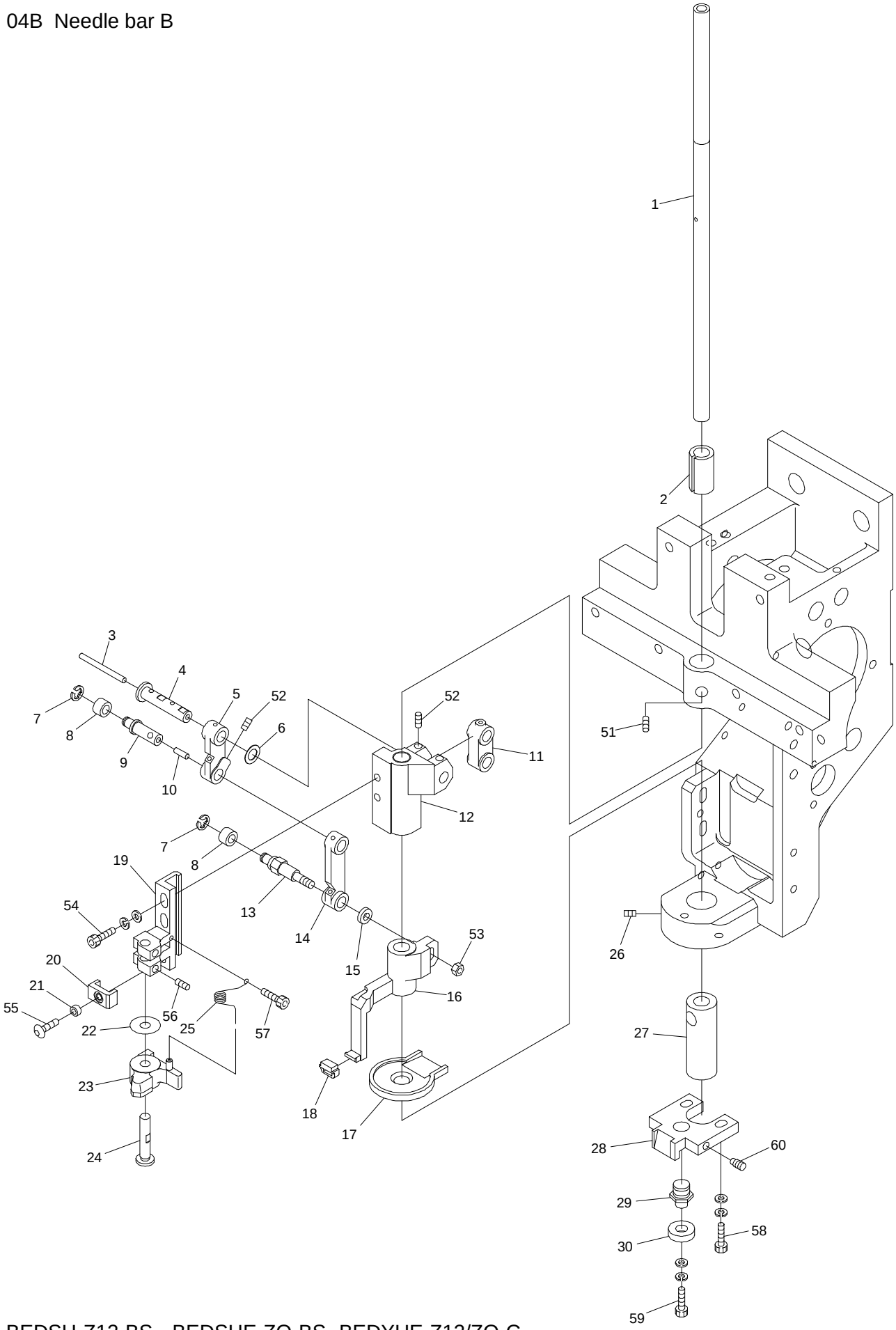

BEDSH-Z12-BS BEDSHE-ZQ-BS BEDYHE-Z12/ZQ-C

04B Needle bar B

ITEM	LIST NO.	DESCRIPTION	Q'TY	NOTE
1	SG230170	Driving shaft	H×1	
2	RD230150	Driving shaft bush upper(BEMAX)	H×1	
3	HT230750	Oil core(30mm)	H×1	
4	HT230471	Small link pin	H×1	
5	HT230491	Link(Small)	H×1	
6	HT230730	Shim ring(10 t=0.3)	H×1	
7	A9012127	E-ring(3)	H×2	
8	KF230530	Roller(For take up lever)	H×2	
9	HT230450	Link roller joint pin	H×1	
10	HT230760	Oil core(8mm)	H×1	
11	HB230200	Needle bar driving link	H×1	
12	HT230510	Needle bar driver slide block	H×1	
13	SG230180	Link roller joint pin(Large)	H×1	
14	HT230480	Link(Large)	H×1	
15	SG230190	Washer for joint pin	H×1	
16	SG230031	Cloth hold support slide block	H×1	
17	SG230000	Oil receive plate	H×1	
18	HT230340	Cloth hold support rubber	H×1	
19	HT230290	Needle bar beat fixing base	H×1	
20	HT230520	Needle bar driving stopper	H×1	
21	A9012368	Spacer(Roll bush)	H×1	
22	RH230550	Shim ring	H×1	
23	RH230540	Needle bar driver	H×1	
24	HT230280	Needle bar driver pin	H×1	
25	HT230560	Needle bar driver return spring	H×1	
26	A9012415	Double point screw M6×7(P0.75)	H×2	
27	SL230180	Driving shaft bush(Lower)	H×1	
28	LA230140	Bearing guide	H×1	
29	SG230300	Bearing pin	H×1	
30	A9010065	Ball bearing 686zz	H×1	
51		Hex.socket set screw M4×10		
52		Hex.socket set screw M4×6(With nylon)		
53		Hex.nut M4		
54		Hex.socket bolt M4×12(With washers)		
55		Hex.socket button bolt M3×6		
56		Hex.socket set screw M4×4(With nylon)		
57		Hex.Socket bolt M2.5×6		
58		Hex.socket bolt M4×15(With washers)		
59		Hex.socket bolt M4×6(With washers)		
60		Hex.socket set screw(Dog point) M4×12		

04C Needle bar C

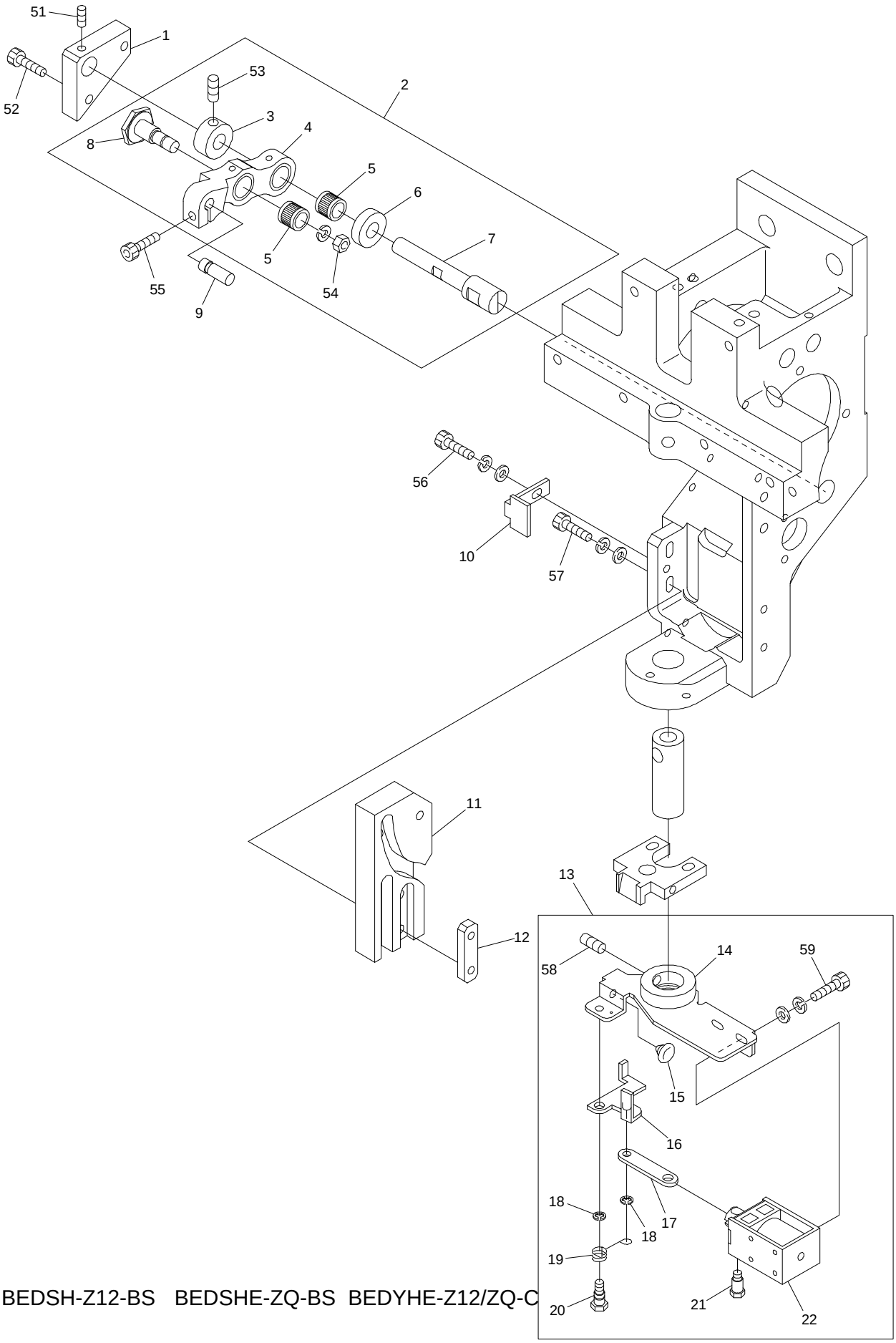

BEDSH-Z12-BS BEDSHE-ZQ-BS BEDYHE-Z12/ZQ-C

030421

04C Needle bar C

ITEM	LIST NO.	DESCRIPTION	Q'TY	NOTE
1	HT230590	Lever pin block	H×1	
2	RR230090	Needle bar driving lever set(P25.65)	H×1	
3	HB230271	Needle bar driving lever fixing pin set collar	H×1	
4	RR230080	Needle bar driving lever(P25.65)	H×1	
5	HB230361	Needle roller with retainer(KV8×11×10SV2)	H×2	
6	HB230281	Needle bar driving lever fixing pin collar	H×1	
7	HT230410	Needle bar driving lever fixing pin	H×1	
8	HB230261	Needle bar driving lever connecting pin	H×1	
9	HB230220	Needle bar driving lever pin(B)	H×1	
10	SG230270	Cam guide plate	H×1	
11	SG230210	Cloth hold cam(K3)	H×1	
12	HT230380	Cam tap plate	H×1	
13	SG270190	Thread support a'ssy	H×1	
14	SG270050	Thread support base	H×1	
15	A9014166	Plug cushion rubber TM-96-6	H×1	
16	SG270060	Thread support lever	H×1	
17	SG270070	Thread support link	H×1	
18	A9012127	E-ring(3)	H×2	
19	SG270120	Thread support return spring	H×1	
20	SG270110	Thread support lever pin screw	H×1	
21	KC270101	Solenoid pin	H×1	
22	A9056037	Keep solenoid TDS-K10SL(With cover)	H×1	
51		Hex.socket set screw M4×4(With nylon)		
52		Hex.socket bolt M4×12(With washers)		
53		Hex.socket set screw M5×5		
54		Hex.nut M6(With spring washer)		
55		Hex.socket bolt M4×14(With adhesive)		
56		Hex.socket bolt M4×8(With washers)		
57		Hex.socket bolt M4×15(With washers)		
58		Hex.socket set screw M5×8		
59		Hex.socket bolt M3×6(With washers)		

04D Needle bar D

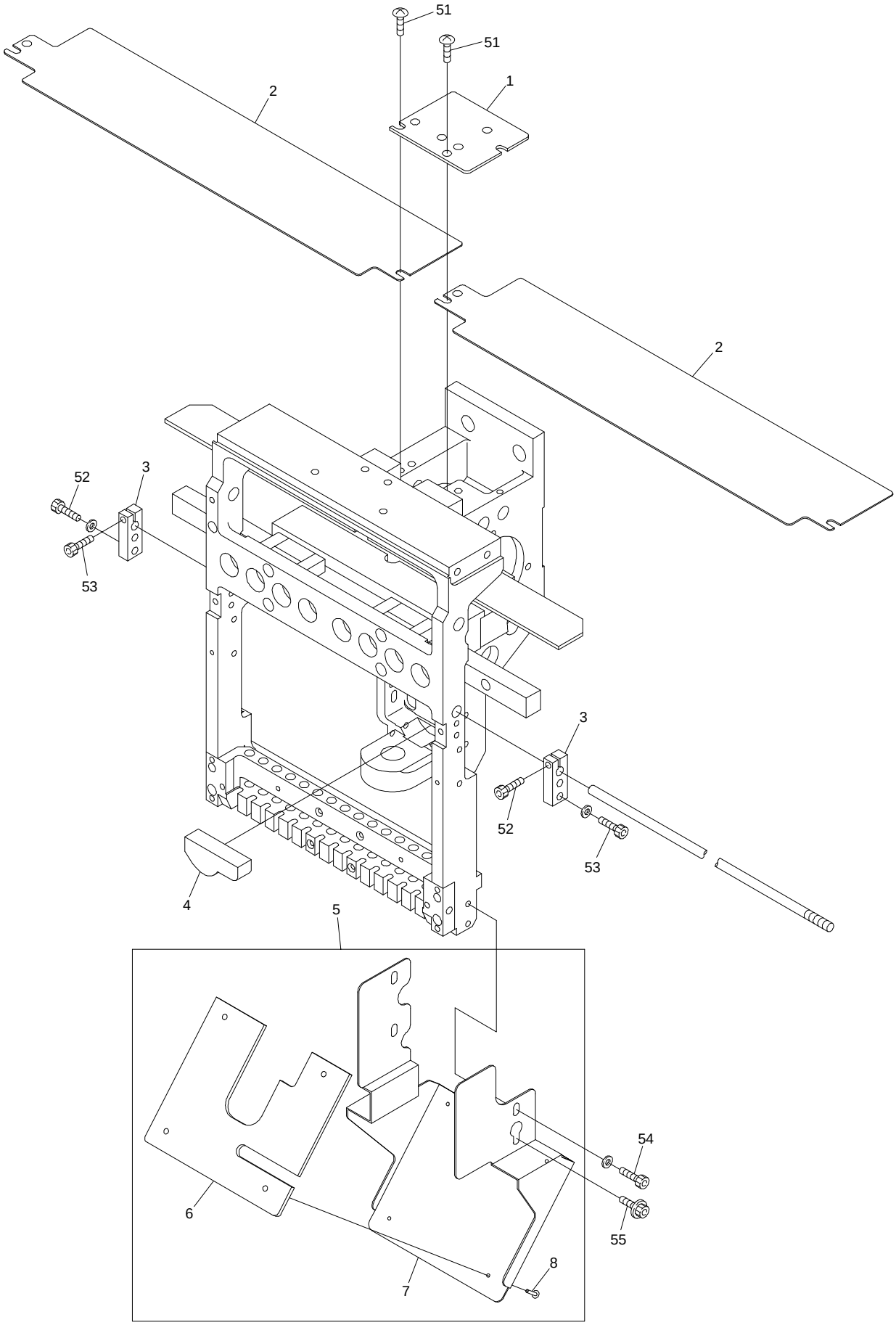

BEDSHE-ZQ-BS BEDYHE-Z12/ZQ-C

04D Needle bar D

ITEM	LIST NO.	DESCRIPTION	Q'TY	NOTE
1	RV250070	Arm upper cover	H×1	
2	SL250110	Upper shaft guard(Needle between 380)	H-1	
	SL250130	Upper shaft guard(Needle between 450)	H-1	
	SL250140	Upper shaft guard(Needle between 520)	H-1	
3	SG230290	Slide block holder	H×2	
4	SG230280	Oil save felt	H×1	
5	SL250080	Cap cover set	H×1	
6	SG250060	Oil holder felt	H×1	
7	SL250090	Cap cover	H×1	
8	A9014168	Brass rivet 2×11.5(Brass)	H×4	
51		Truss screw M5×6		
52		Hex.socket bolt M4×15(With plain washer)		
53		Hex.socket bolt M4×14		
54		Hex.socket bolt M4×6(With plain washer)		
55		Hex.socket bolt M4×25(With washers)		

04E Needle bar E

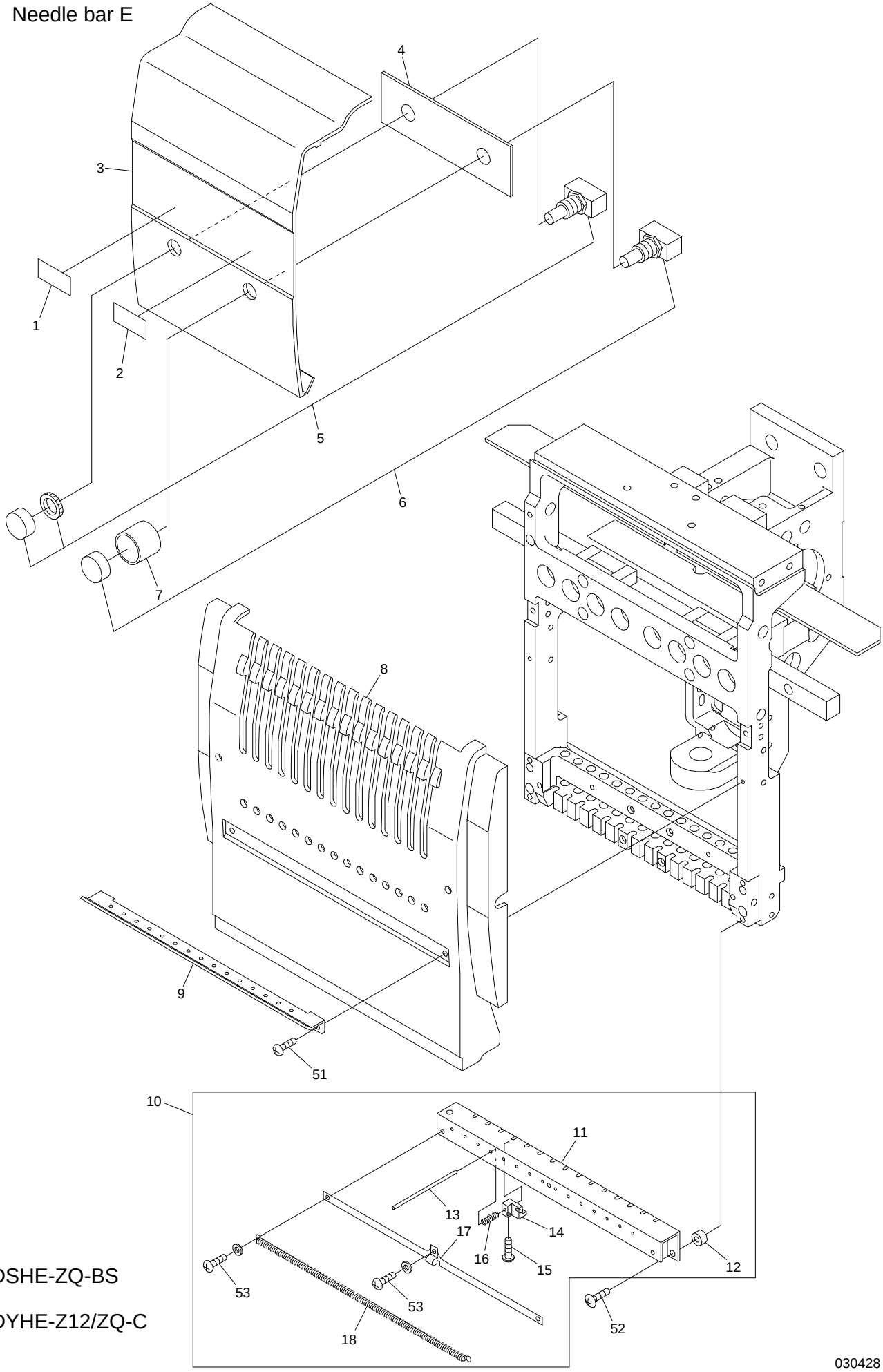

BEDSHE-ZQ-BS

BEDYHE-Z12/ZQ-C

030428

04E Needle bar E

ITEM	LIST NO.	DESCRIPTION	Q'TY	NOTE
1	SF250150	Name plate(Stop)	2	
2	SF250140	Name plate(Start)	2	
3	SF250100	Head between cover(ZQ,P=380)	10	
	SL250020	Head between cover(ZQ,P=380) with hole	4	
	SM250110	Head between cover(ZQ,P=450)	7	
	SM250120	Head between cover(ZQ,P=450) with hole	4	
	SF250120	Head between cover(ZQ,P=520)	7	
	SL250010	Head between cover(ZQ,P=520) with hole	4	
4	SM250160	Support plate	4	
5	A9052081	Push button switch(SB-221 N/O,AT-412R)	4	
6	A9052080	Push button switch(SB-221 N/O,AT-412M)	4	
7	KX510140	Switch cover	4	
8	SL250000	Head cover(ZQ6)	H×1	
9	RD240271	Thread guard(With ceramic)	H×1	
10	SL270000	Thread support apron a'ssy	H×1	
11	SL270010	Thread support apron	H×1	
12	SG270140	Thread support apron spacer	H×2	
13	SG270130	Thread support pin	H×15	
14	SG270000	Thread support clamp	H×15	
15	HT270063	Thread support clamp set screw	H×15	
16	SG270180	Thread support spring	H×15	
17	SL270030	Thread holder spring support	H×1	
18	SL270020	Thread holder spring	H×1	
51		Pan screw M3×8		
52		Truss screw M4×12		
53		Pan screw M3×4		

05 Jump

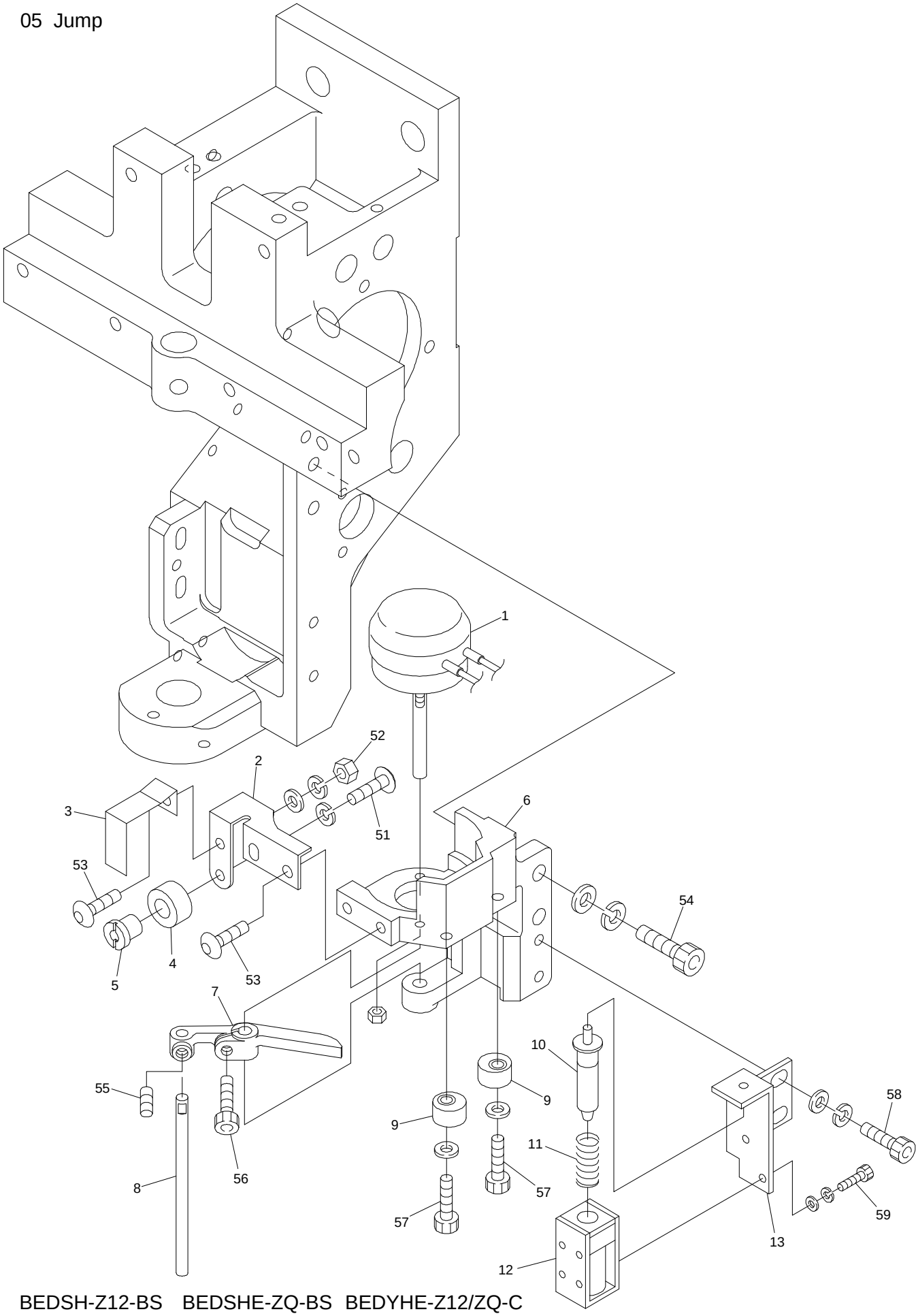

BEDSH-Z12-BS BEDSHE-ZQ-BS BEDYHE-Z12/ZQ-C

05 Jump

ITEM	LIST NO.	DESCRIPTION	Q'TY	NOTE
1	A9056036	Rotary solenoid 3ER35-35×3×8×9 M990386R(ETL)	H×1	
2	SG230260	Needle bar stopper fixing bracket	H×1	
3	MH230161	Indication plate	H×1	
4	HT230220	Needle bar stopper	H×1	
5	HT230620	Needle bar stopper fixing pin	H×1	
6	RD230250	Jump solenoid fixing bracket	H×1	
7	HB240020	Jump solenoid lever	H×1	
8	HB240030	Jump solenoid lever pin	H×1	
9	HB240041	Jump eccentric	H×2	
10	HB560080	Solenoid plunger a'ssy	H×1	
11	HB560060	Keep solenoid spring	H×1	
12	HB560211	Keep solenoid TDS-K07A(ETL)	H×1	
13	RV230050	Keep solenoid fixed plate	H×1	
51		Hex.socket button bolt M4×8		
52		Hex.nut M4		
53		Hex.socket button bolt M4×6		
54		Hex.socket bolt M5×16(With washers)		
55		Hex.socket set screw M4×4(With adhesion)		
56		Hex.socket bolt M4×8		
57		Hex.socket bolt M4×12(With plain washer) (With adhesion)		
58		Hex.socket bolt M4×8(With washers)		
59		Hex.socket bolt M2.6×5(With washers)		

06 Thread guide

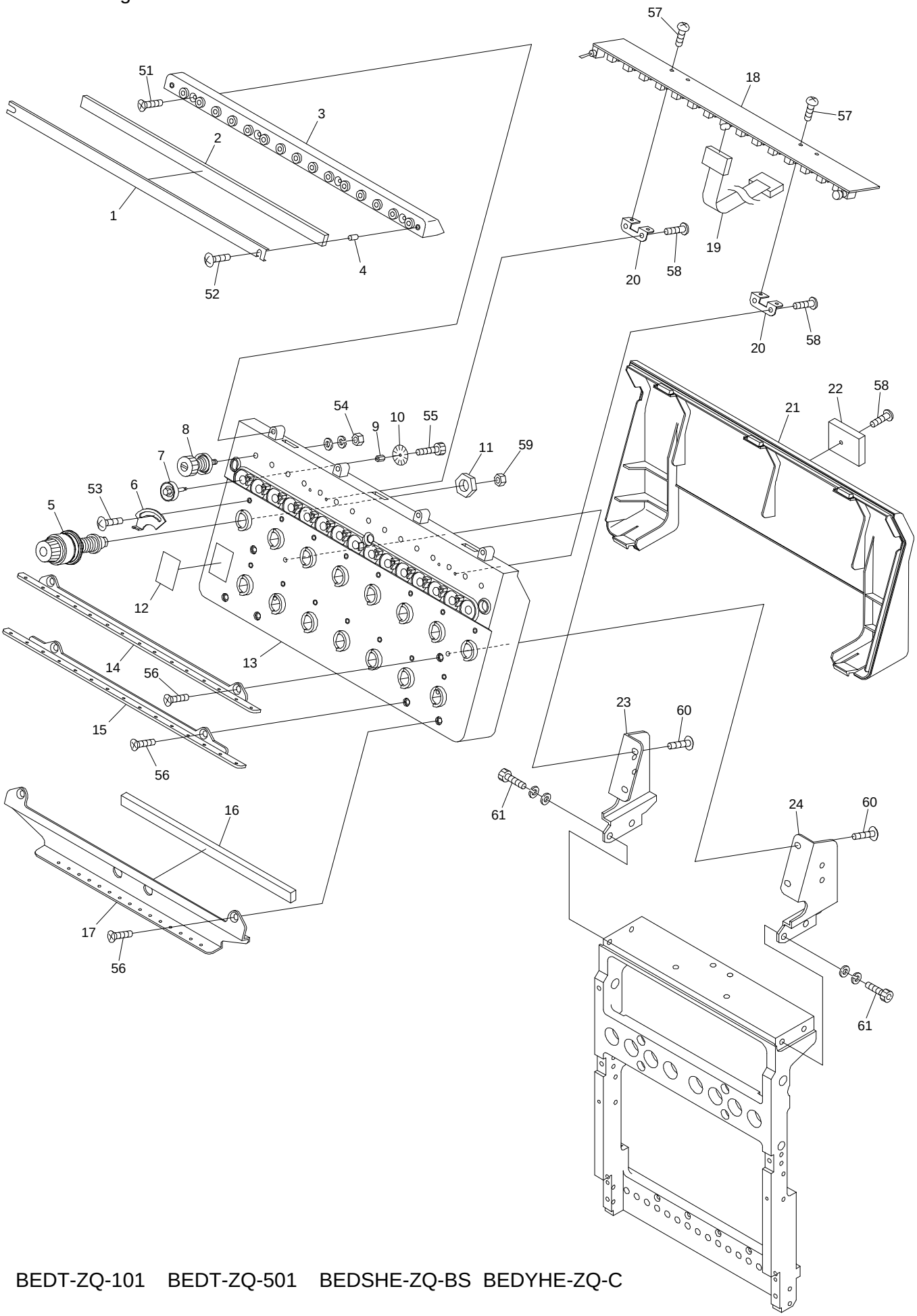

BEDT-ZQ-101 BEDT-ZQ-501 BEDSHE-ZQ-BS BEDYHE-ZQ-C

030430

06 Thread guide (H=Head Q'TY)

ITEM	LIST NO.	DESCRIPTION	Q'TY	NOTE
1	RV240100	Felt frame(DSH-ZQ)	H×1	
2	RV240110	Felt(DSH-ZQ)	H×1	
3	RV240020	Thread collar base(DSH-ZQ)	H×1	
4	A9012438	Felt hold spacer(DSH-ZQ)	H×2	
5	RD240154	Dial tension a'ssy(DS)	H×15	
6	RR240510	Thread spring adjusting plate	H×15	
7	HT240290	Tension wheel a'ssy	H×15	
8	RR240300	Tension a'ssy(DS)	H×15	
9	KN540510	Tension wheel nut	H×15	
10	HT240101	Lower thread detection sensor disk(YN)	H×15	
11	HT240180	SM-nut	H×15	
12	RR240390	Number label	H×1	
13	RV240010	Tension base case a'ssy(DSH-ZQ)	H×1	
14	RV240040	Thread guide plate upper(DSH-ZQ)	H×1	
15	RV240050	Thread guide plate lower(DSH-ZQ)	H×1	
16	RV240091	Sponge rubber(DSH-ZQ)	H×1	
17	RV240062	Second thread guide plate(DSH-ZQ)	H×1	
18	EBY02610	8560·switch board with thread detection	H×1	
19	EBY01625	H1842 16 needle flat cable	H×1	
20	RR240330	Switch board fixed base	H×2	
21	SJ240010	Tension base cover(DYHE-ZQ)	H×1-1	
22	A9068032	FCW clamp(FCW-26)	H×1	
23	RV240081	Tension base bracket·L(DSH-ZQ)	H×1	
24	RV240071	Tension base bracket·R(DSH-ZQ)	H×1	
51		Flush screw M3×8		
52		Truss screw M3×14		
53		Truss screw M3×5		
54		Hex.nut SM11/64(With washers)		
55		Hex.socket bolt M2×3		
56		Flush screw M4×8		
57		Pan screw M3×4		
58		Pan head tapping screw B tight M3×8		
59		Hex.nut M4 ?		
60		Truss screw M4×10		
61		Hex.socket bolt M5×15(With washers)		

07 Color change

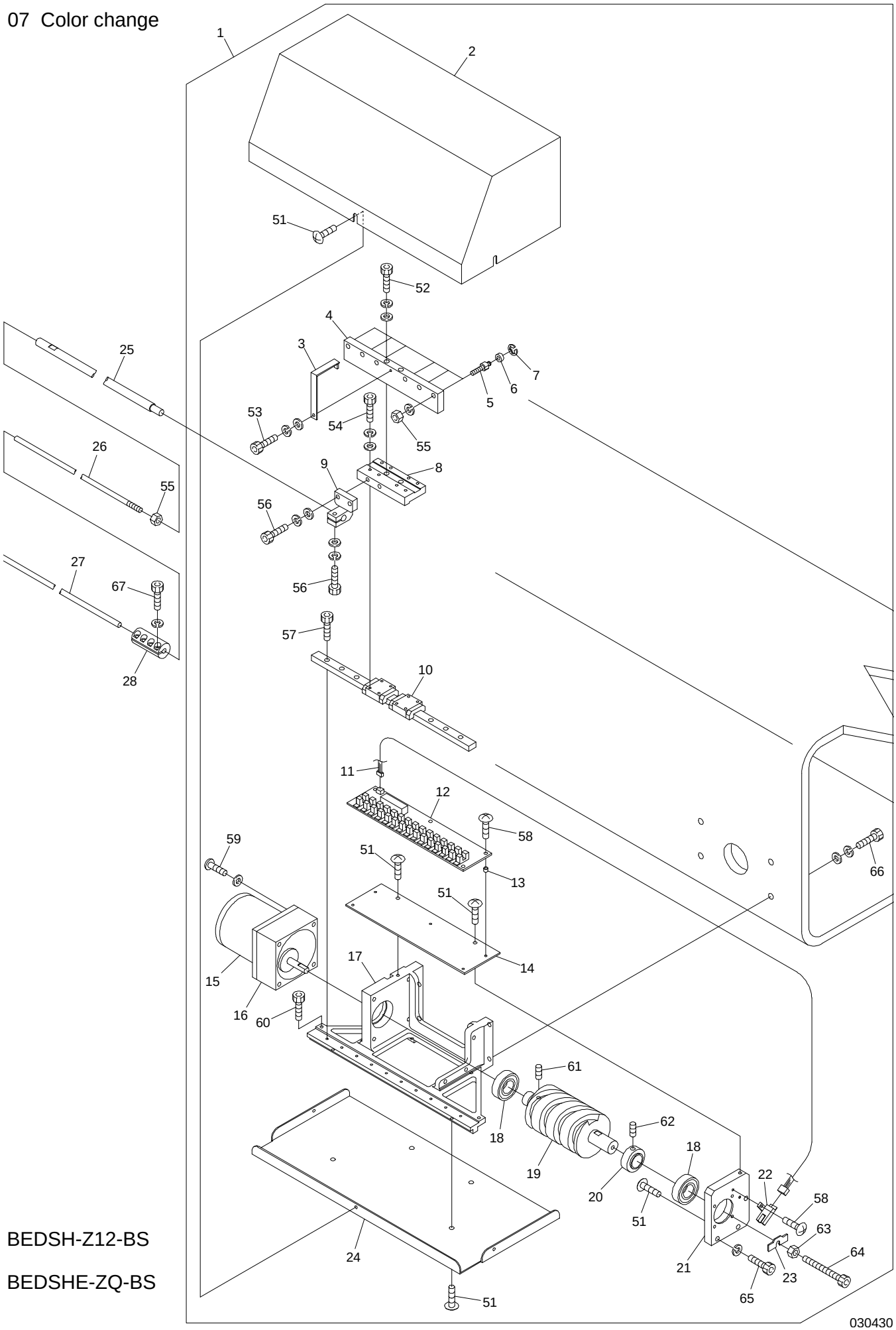

BEDSH-Z12-BS

BEDSHE-ZQ-BS

07 Color change

ITEM	LIST NO.	DESCRIPTION	Q'TY	NOTE
1	SG330051	Color change a'ssy for slide	1	
2	SG330160	Color change cover(Upper)	1	
3	SG330140	Sensor dock	1	
4	SG330110	Connecting block	1	
5	KX330160	Connecting collar shaft	6	
6	A9010063	Bearing MR105ZZ(NSK)	6	
7	A9012127	E-ring 3	6	
8	SG330120	LM base plate	1	
9	KX230170	Joint block	1	
10	SG330100	LM guide	1	
11	A9053079	Lock sensor cable Z type	1	
12	EBY01650	Color change board	1	
13	A9012208	Spacer(Roll bush) 5×4L	5	
14	SG330130	Board fixed base	1	
15	A9065092	Reversible motor 3RJ10GB-AUL-E4	1	
16	A9065106	Gear head 3GB18K-D5	1	
17	SG330060	Color change base	1	
18	A9010004	Bearing 6003ZZ	2	
19	SG330070	Color change cam	1	
20	SG330080	Bearing hold collar	1	
21	SG330090	Color change side plate	1	
22	A9060063	Photo micro sensor EE-SX672A	1	
23	SG330151	Rotation sensor dock	1	
24	SG330170	Color change cover(Lower)	1	
25	SG330030	Color change connecting shaft(For Z12/V500)	1	
26	SG330020	Connecting rod right	1	
27	SG330010	Connecting rod	2	
28	SG330040	Rod joint 6	2	
51		Truss screw M4×8		
52		Hex.socket bolt M6×35(With washers)		
53		Hex.socket bolt M3×10(With washers)		
54		Hex.socket bolt M3×14(With washers)		
55		Hex.nut M6		
56		Hex.socket bolt M5×15(With washers)		
57		Hex.socket bolt M3×10		
58		Truss screw M3×8		
59		Pan screw M5×50(With plain washer)		
60		Hex.socket bolt M4×6		
61		Hex.socket set screw M5×10		
62		Hex.socket set screw M6×5		
63		Hex.nut M5		
64		Hex.socket bolt M5×30		
65		Hex.socket bolt M5×20(With spring washer)		
66		Hex.socket bolt M6×25(With washers)		
67				

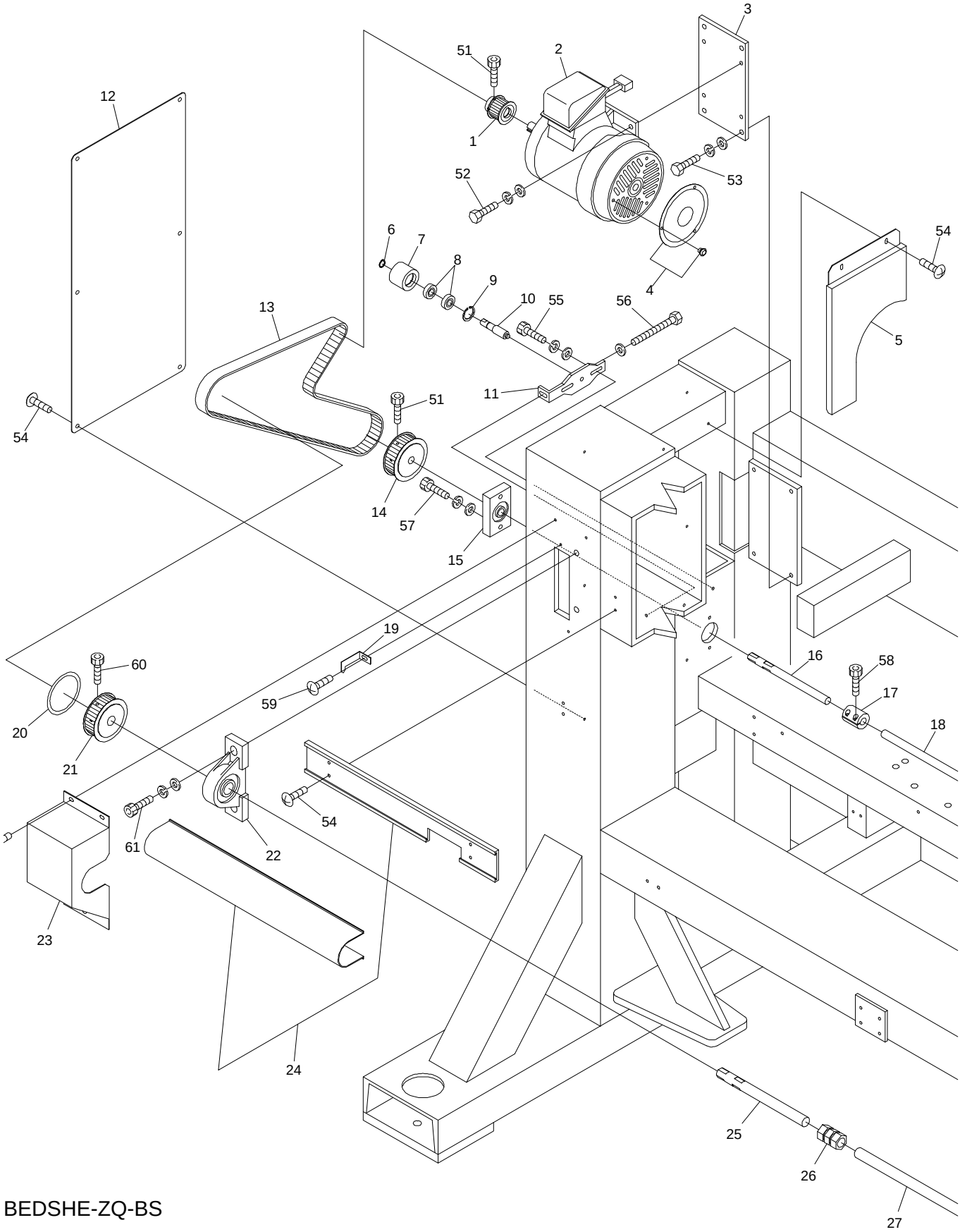
3
51
2
12
1
52
53
6
7
8
9
10
55
56
4
54
5
13
11
51
54
14
57
15
19
60
16
58
17
59
20
18
21
54
61
22
23
24
25
26
27

08 Drive

ITEM	LIST NO.	DESCRIPTION	Q'TY	NOTE
1	RP310170	Motor pulley(S5M-26)	1	
2	HV310210	IK-FBK8-4P-0.75kw VF3 with cable(ETL)	1	
3	SM490000	Motor base	1	
4	RJ250160	Motor fan cover	1	
5	SM250020	Stand cover(Inside)	1	
6	A9012066	C-ring(For shaft f12)	1	
7	RQ310000	Idler	1	
8	A9010003	Bearing 6001ZZ	2	
9	A9012063	C-ring(For hole f28)	1	
10	SM310030	Idler shaft	1	
11	SM310020	Idler bracket	1	
12	SM250010	Stand cover(L)	1	
13	A9020180	Timing belt B250S5M1420	1	
14	SC310010	f15 lower shaft timing pulley(S5M-52)	1	
15	SC310061	Lower shaft housing	1	
16	SM310010	Lower shaft 15	1	
17	HH481932	Pulse motor coupling	1	
18	HB320070	Connecting shaft f15×3300	2	
19	SC310050	Angle instructions plate	1	
20	SC310100	Rotary angle label	1	
21	SC310000	f20 upper shaft timing pulley(S5M-52)	1	
22	A9011259	Pillow block(UCP305-20M-U1,SW)	1	
23	SM480260	Pulley box	1	
24	1PSM153800	Shaft mogol & cover(B15S,380ST)	1	
25	SM310000	Upper shaft 20	1	
26	A9013069	N coupling N-20-20	2	
27	RN320010	Upper shaft connecting shaft(f20×3700)	2	
51		Hex.socket bolt M5×15(Black)		
52		Hex.bolt M8×20(With washers)		
53		Hex.bolt M8×25(With washers)		
54		Truss screw M5×10		
55		Hex.socket bolt M6×20(With washers)		
56		Hex.bolt M6×60(Full screw)		
57		Hex.socket bolt M5×25(With washers)		
58		Hex.socket bolt M5×14(Black)		
59		Truss screw M5×15		
60		Hex.socket bolt M6×15(Black)		
61		Hex.socket bolt M12×35(With washers)		

10A Pantograph drive A

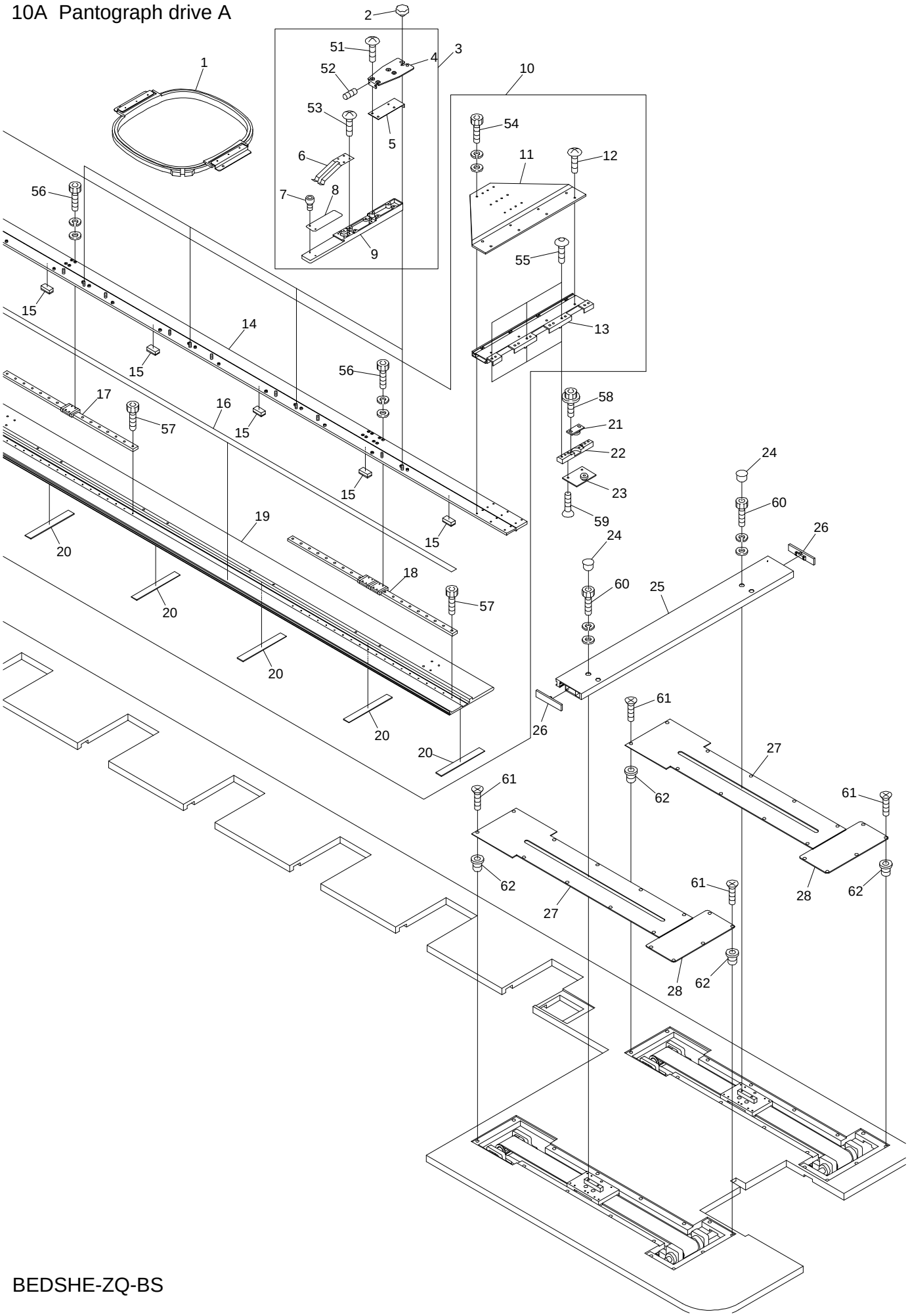

10A Pantograph drive A

ITEM	LIST NO.	DESCRIPTION	Q'TY	NOTE
1	FR92460304A380A	Square pantograph a'ssy(460×304)	H×1	P380
	FR92460354A450A	Square pantograph a'ssy(460×354)	H×1	P450
	FR92460434A520A	Square pantograph a'ssy(460×434)	H×1	P520
2	A9012437	Knob nut(32 M6 tap hole)	46	
3	SC730092	Product pantograph stay a'ssy for compact mashine	H+1	
4	SC730102	Stay bracket for compact mashine	H+1	
5	SC730111	Spacer	H+1	
6	LA730650	Product pantograph hold spring	H+1	
7	LA730610	Positioning pin	H×2+2	
8	LA730630	Slide plate	H+1	
9	LA730590	Pantograph stay main body	H+1	
10	1FSM15380380AH0	V-guide pantograph frame a'ssy(15T,P380)	1	
	1FSM12450450AH0	V-guide pantograph frame a'ssy(12T,P450)	1	
	1FSM12520520AH0	V-guide pantograph frame a'ssy(12T,P520)	1	
11	SM480020	Connecting plate	1	
12	KF730500	Truss screw SM11/64×10.5	8	
13	SM480030	V-member	1	
14	SM480000	V-slide bracket(15T,P380)	1	
15	SM480310	Felt(L=30)	26	
16	SM480320	Threshold slip(L=6130) 15T,380P	1	
17	SM48004A380	LM guide(SRS9,470L)	5	
18	SM48005A380	LM guide(2SRS9,590L)	1	
19	SM480010	V-guide pantograph frame(15T,P380)	1	
20	SM480300	V-guide felt	17	
21	RR730010	V-guide bearing base a'ssy(Upper)	3	
22	RR730050	V-guide bearing hold base	3	
23	RR730020	V-guide bearing base a'ssy(Lower)	3	
24	A9014160	Locking holl plug LHP-0500	4	
25	SM730000	V-sub pantograph frame(450ST)	1	
26	RR730030	V-sub pantograph frame cap	2	
27	SM48023A380	V-guide cover(380ST)	2	
28	RJ250040	V-guide servise cover(Front)	2	
51		Truss screw M4×10		
52		Hex.socket set screw M3×8(With nylons)		
53		Truss screw M3×10		
54		Hex.socket bolt M4×12(With washers)		
55		Hex.socket button bolt M5×12		
56		Hex.socket bolt M3×10(With washers)		
57		Hex.socket bolt M3×6		
58		Hex.socket flange bolt M5×12		
59		Hex.socket flush screw M5×12		
60		Hex.socket bolt M5×18(With washers)		
61		Flush screw M4×8(Under cut)		
62		Rag nut(C) M4		

10B Pantograph drive B

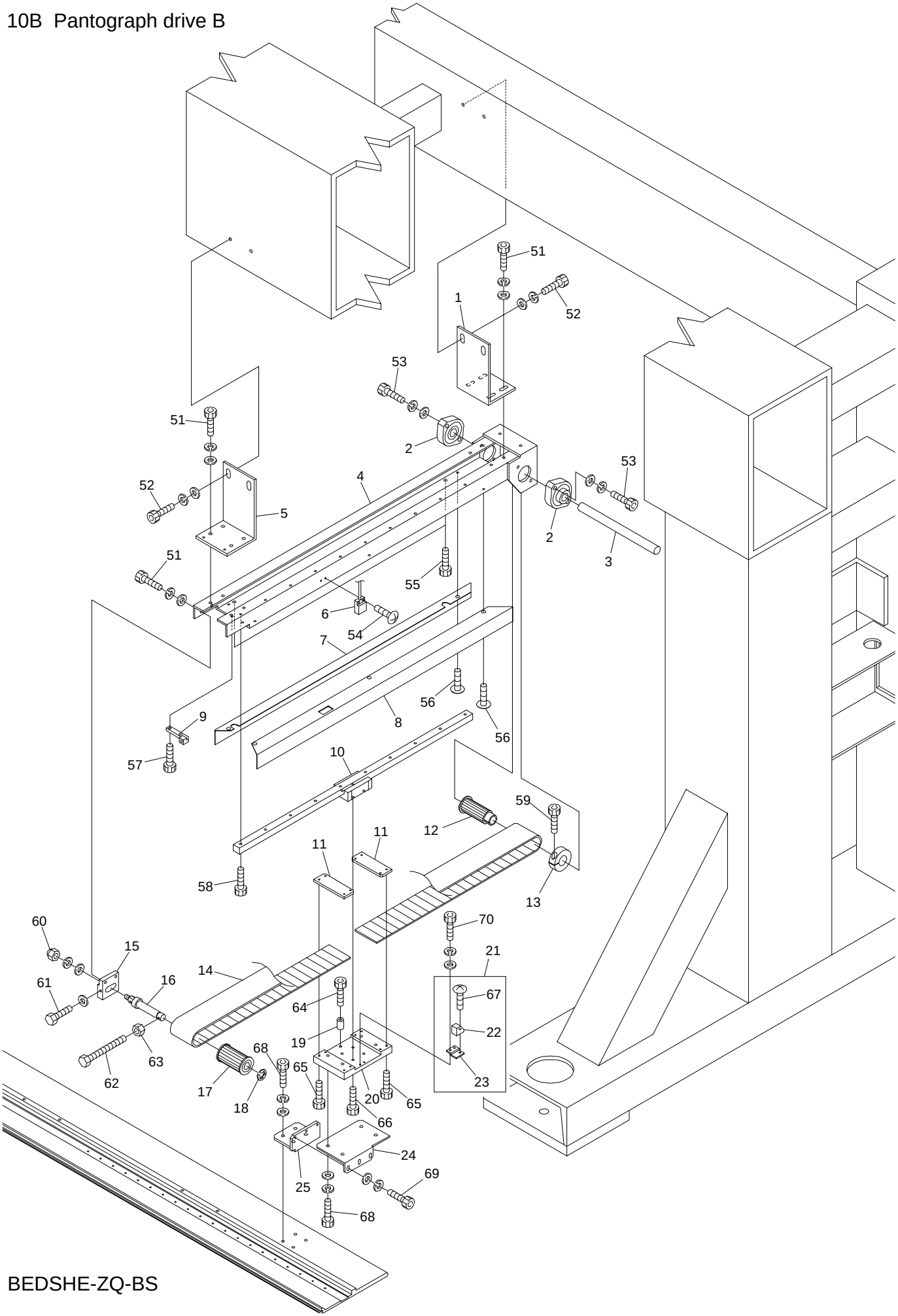

BEDSHE-ZQ-BS

10B Pantograph drive B

ITEM	LIST NO.	DESCRIPTION	Q'TY	NOTE
1	SM480160	H-rail base fixed bracket(Rear)	1	
2	HP321140	Upper shaft connecting bearing unit(SBFLN02)	2	
3	SM480140	H-pantograph drive pulley shaft(183L)	1	
4	SM480060	H-rail base(450ST)	1	
5	SM480150	H-rail base fixed bracket(Front)	1	
6	A9052031	Switch(MH-601AM)	1	
7	SM480180	Guide rail side cover(L)	1	
8	SM480190	Guide rail side cover(Pantograph stop)	1	
9	SM480130	Pulley stopper	1	
10	SM480070	LM guide(SSR15W,560L)	1	
11	RF480261	Timing belt hold rack(W=50)	2	
12	RF480101	Pantograph drive pulley rear(W=50)	1	
13	HH481980	19 clamp	1	
14	RR480080	Free span belt(B500-S5M)	1	
15	SM480120	Pulley bracket	1	
16	SM480110	Timing pulley shaft	1	
17	RF480140	Pantograph drive pulley front(W=50)	1	
18	A9012052	E-ring(10)	1	
19	SM480290	Stopper collar	1	
20	SM480080	H-roller base	1	
21	SM450000	Magnet fixing bracket a'ssy	1	
22	A9052030	Magnet M-102A-02	1	
23	SM450010	Magnet fixing bracket	1	
24	SM480090	H-guide base	1	
25	SM480100	H-guide stay	1	
51		Hex.socket bolt M5×15(With washers)		
52		Hex.socket bolt M6×20(With washers)		
53		Hex.socket bolt M5×20(With washers)		
54		Truss screw M3×10		
55		Hex.socket bolt M6×6		
56		Truss screw M4×6(Uni chrome)		
57		Hex.socket bolt M4×10		
58		Hex.socket bolt M4×12		
59		Hex.socket bolt M5×18		
60		Hex.cap nut M8(With washers)		
61		Hex.bolt M5×30(With plain washer)		
62		Hex.socket bolt M4×40(With washers)		
63		Hex.nut M4		
64		Hex.socket bolt M5×20		
65		Hex.socket bolt M3×15		
66		Hex.socket bolt M4×8		
67		Truss screw M3×6		
68		Hex.socket bolt M5×12(With washers)		
69		Hex.socket bolt M4×12(With washers)		
70		Hex.socket bolt M3×8(With washers)		

10C Pantograph drive C

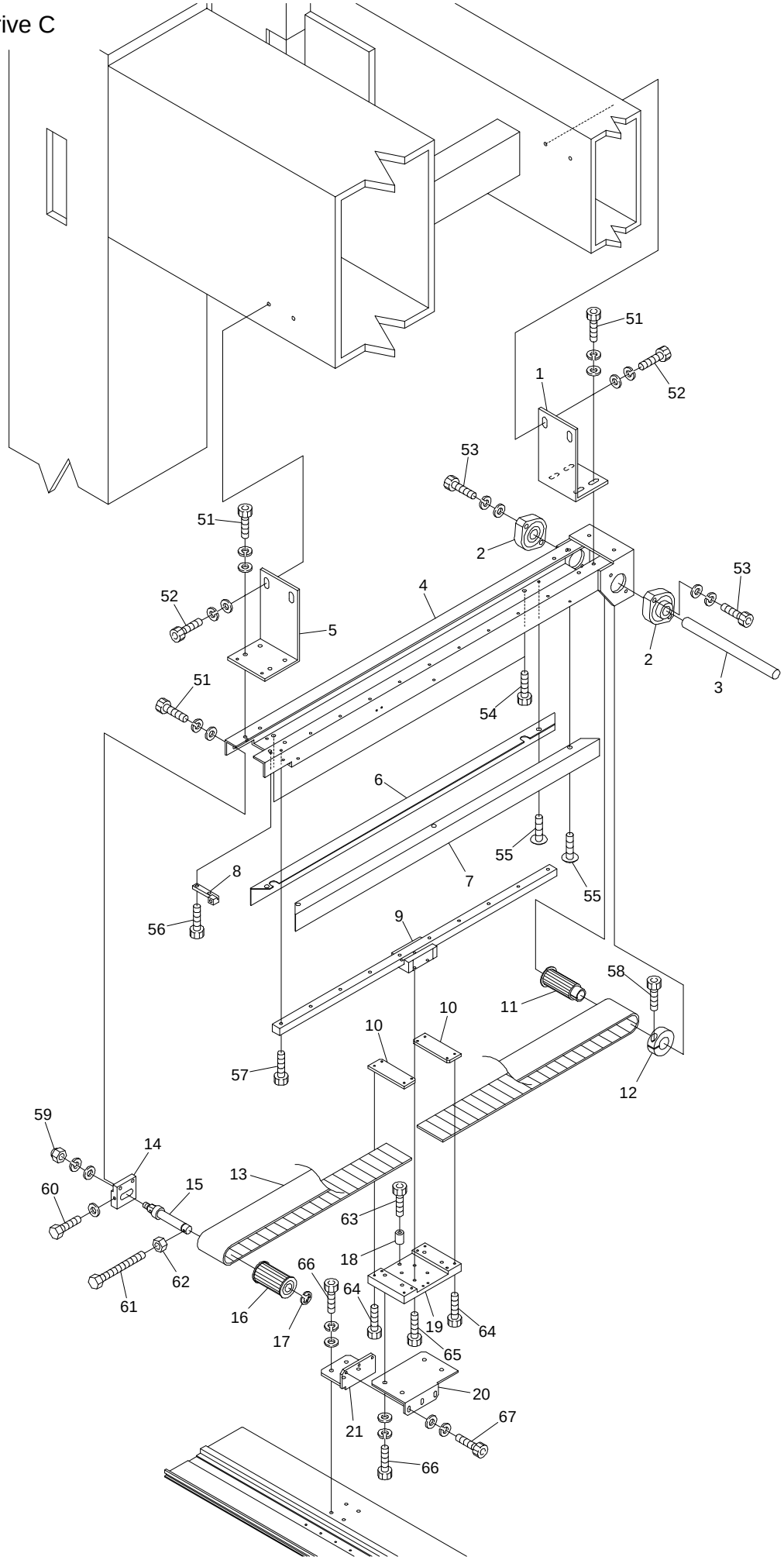

BEDSHE-ZQ-BS

10C Pantograph drive C R= Qty. of H Rail Drives

ITEM	LIST NO.	DESCRIPTION	Q'TY	NOTE
1	SM480160	H-rail base fixed bracket(Rear)	R-1	
2	HP321140	Upper shaft connecting bearing unit(SBFLN02)	2	
3	SM480140	H-pantograph drive pulley shaft(183L)	R-1	
4	SM480060	H-rail base(450ST)	R-1	
5	SM480150	H-rail base fixed bracket(Front)	R-1	
6	SM480180	Guide rail side cover(L)	R-1	
7	SM480170	Guide rail side cover(R)	R-2	
8	SM480130	Pulley stopper	R-1	
9	SM480070	LM guide(SSR15W,560L)	R-1	
10	RF480261	Timing belt hold rack(W=50)	2	
11	RF480101	Pantograph drive pulley rear(W=50)	R-1	
12	HH481980	19 clamp	R-1	
13	RR480080	Free span belt(B500-S5M)	R-1	
14	SM480120	Pulley bracket	R-1	
15	SM480110	Timing pulley shaft	R-1	
16	RF480140	Pantograph drive pulley front(W=50)	R-1	
17	A9012052	E-ring(10)	R-1	
18	SM480290	Stopper collar	R-1	
19	SM480080	H-roller base	R-1	
20	SM480090	H-guide base	R-1	
21	SM480100	H-guide stay	R-1	
51		Hex.socket bolt M5×15(With washers)		
52		Hex.socket bolt M6×20(With washers)		
53		Hex.socket bolt M5×20(With washers)		
54		Hex.socket bolt M6×6		
55		Truss screw M4×6(Uni chrome)		
56		Hex.socket bolt M4×10		
57		Hex.socket bolt M4×12		
58		Hex.socket bolt M5×18		
59		Hex.cap nut M8(With washers)		
60		Hex.bolt M5×30(With plain washer)		
61		Hex.socket bolt M4×40(With washers)		
62		Hex.nut M4		
63		Hex.socket bolt M5×20		
64		Hex.socket bolt M3×15		
65		Hex.socket bolt M4×8		
66		Hex.socket bolt M5×12(With washers)		
67		Hex.socket bolt M4×12(With washers)		

10D Pantograph drive D

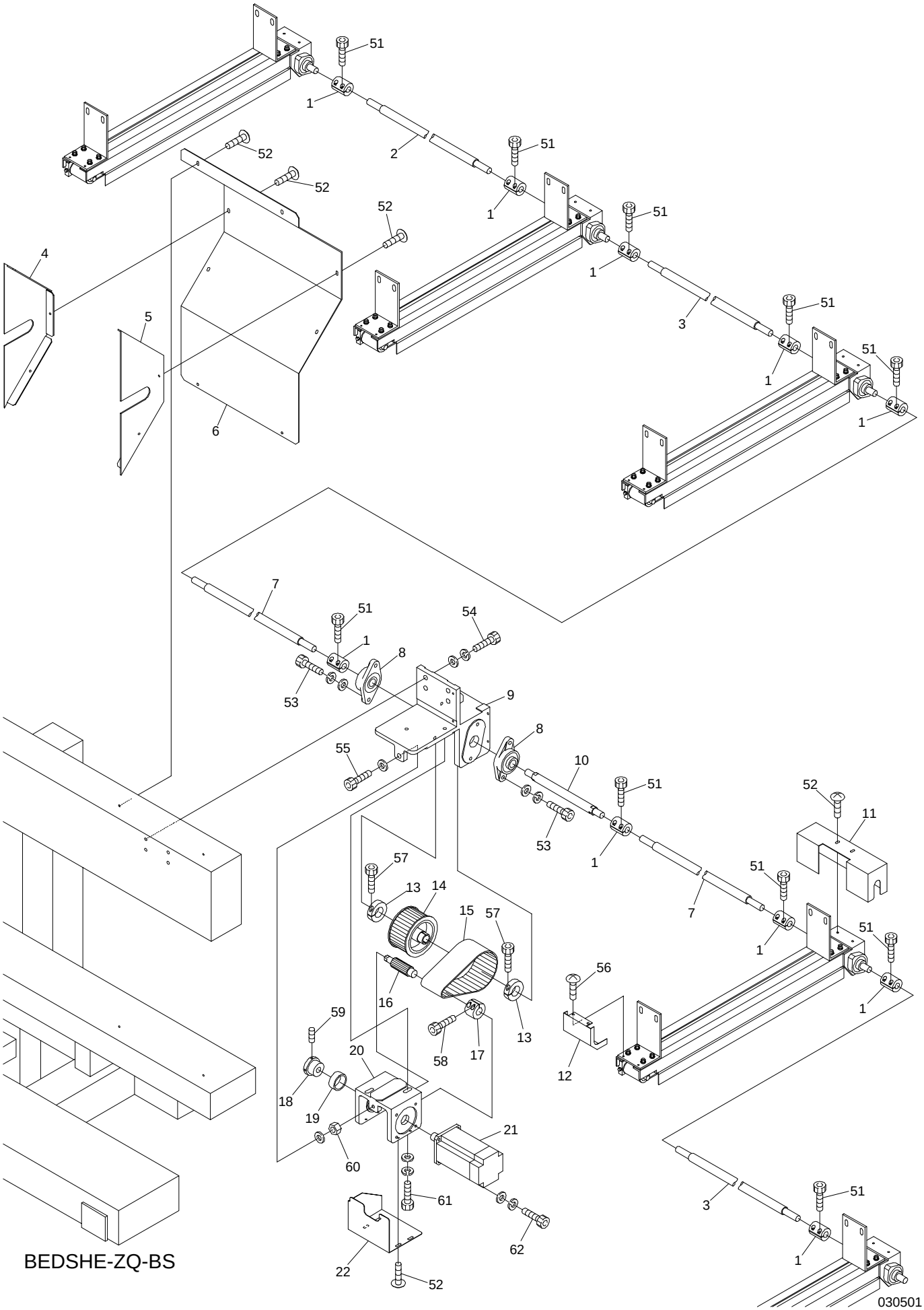

BEDSHE-ZQ-BS

10D Pantograph drive D

ITEM	LIST NO.	DESCRIPTION	Q'TY	NOTE
1	HH481932	Pulse motor coupling	10	
2	SM470010	H-connecting shaft(953L)	1	
3	SM470020	H-connecting shaft(1333L)	2	
4	SM250180	Machine back end cover(L) ETL	1	
5	SM250170	Machine back end cover(R) ETL	1	
6	SM250150	Machine back cover	1	
7	SM470000	H-connecting shaft(540L)	2	
8	A9011240	Bearing unit(UCFL204)	2	
9	RF490011	Bearing bracket	1	
10	RF490071	Pulley shaft	1	
11	SM250040	H-drive cover	R×1	
12	SM250030	H-guide rail frout cover	R×1	
13	RR320041	Clamp	2	
14	RF490041	Pantograph drive pulley large(Shaft side)	1	
15	RF490061	Timing belt(B500S5M450)	1	
16	RF490051	Pantograph drive pulley small(Motor side)	1	
17	RF490080	Motor pulley connecting coupling	1	
18	KR480100	Pantograph drive pulley bearing collar	1	
19	A9010056	Needle bearing	1	
20	RF490021	Motor bracket(H-side)	1	
21	RF490000	AC servo motor(TS4514)	1	
22	RR250011	H-pantograph drive unit cover(Lower)DSH	1	
51		Hex.socket bolt M5×18		
52		Truss screw M5×8		
53		Hex.socket bolt M6×30(With washers)		
54		Hex.socket bolt M8×35(With washers)		
55		Hex.bolt M8×55(With plain washer)		
56		Truss screw M4×6(Uni chrome)		
57		Hex.socket bolt M6×20		
58		Hex.socket bolt M5×16		
59		Hex.socket set screw M5×10		
60		Hex.nut M8		
61		Hex.socket bolt M8×30(With washers)		
62		Hex.socket bolt M6×25		

10E Pantograph drive E

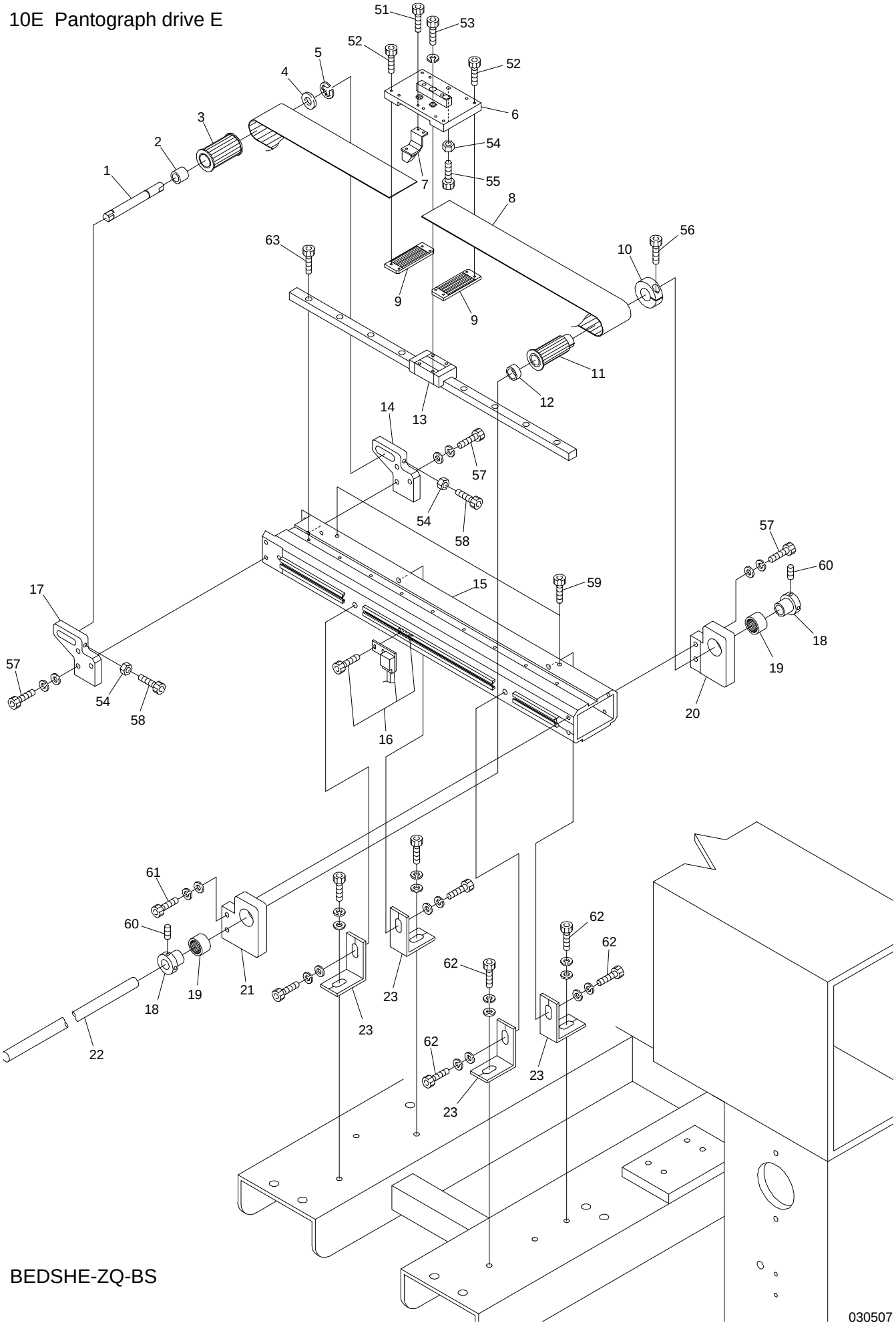

BEDSHE-ZQ-BS

030507

10E Pantograph drive E

ITEM	LIST NO.	DESCRIPTION	Q'TY	NOTE
1	RJ480061	Timing pulley shaft	2	
2	RJ480070	Timing pulley posistion decision collar	2	
3	RF480140	Pantograph drive pulley front(W=50)	2	
4	A9010070	Thrust washer	2	
5	A9012052	E-ring 10	2	
6	SM480210	V-roller base	2	
7	RJ450021	Magnet fixing bracket a'ssy	1	
8	RR480080	Free span belt(B500-S5M)	2	
9	RF480261	Timing belt hold rack(W=50)	4	
10	HH481980	Clamping 19	2	
11	RF480101	Pantograph drive pulley rear(W=50)	2	
12	RJ480080	Pantograph drive pulley posistion decision collar	2	
13	SC480040	LM guide(540L)	2	
14	RJ480051	Timing pulley fixing bracket(L)	2	
15	SM48020A380	V-guide rail base(380ST)	2	
	SM48020B450	V-guide rail base(450ST)	2	
	SM48020B520	V-guide rail base(520ST)	2	
16	RJ450003	Origin point sensor bracket a'ssy(NSH-BS)	1	
17	RJ480041	Timing pulley fixing bracket(R)	1	
18	HH481970	Pulse motor connecting shaft collar	4	
19	A9011063	Needle bearing(TLA2016)	4	
20	RF480091	Pantograph drive pulley fixing base(L)	2	
21	RF480081	Pantograph drive pulley fixing base(R)	2	
22	HB320070	Connecting shaft f15×225L	2	
23	SM480220	V-guide rail base fixing bracket	4	
51		Hex.socket bolt M3×8		
52		Hex.socket bolt M3×15		
53		Hex.socket bolt M4×12(With spring washer)		
54		Hex.nut M6		
55		Hex.socket bolt M6×20		
56		Hex.socket bolt M5×18		
57		Hex.socket bolt M6×22(With washers)		
58		Hex.socket bolt M6×45		
59		Hex.socket bolt M6×8		
60		Hex.socket set screw M5×8		
61		Hex.socket bolt M6×25(With washers)		
62		Hex.socket bolt M8×25(With washers)		
63		Hex.socket bolt M4×12		

10F Pantograph drive F

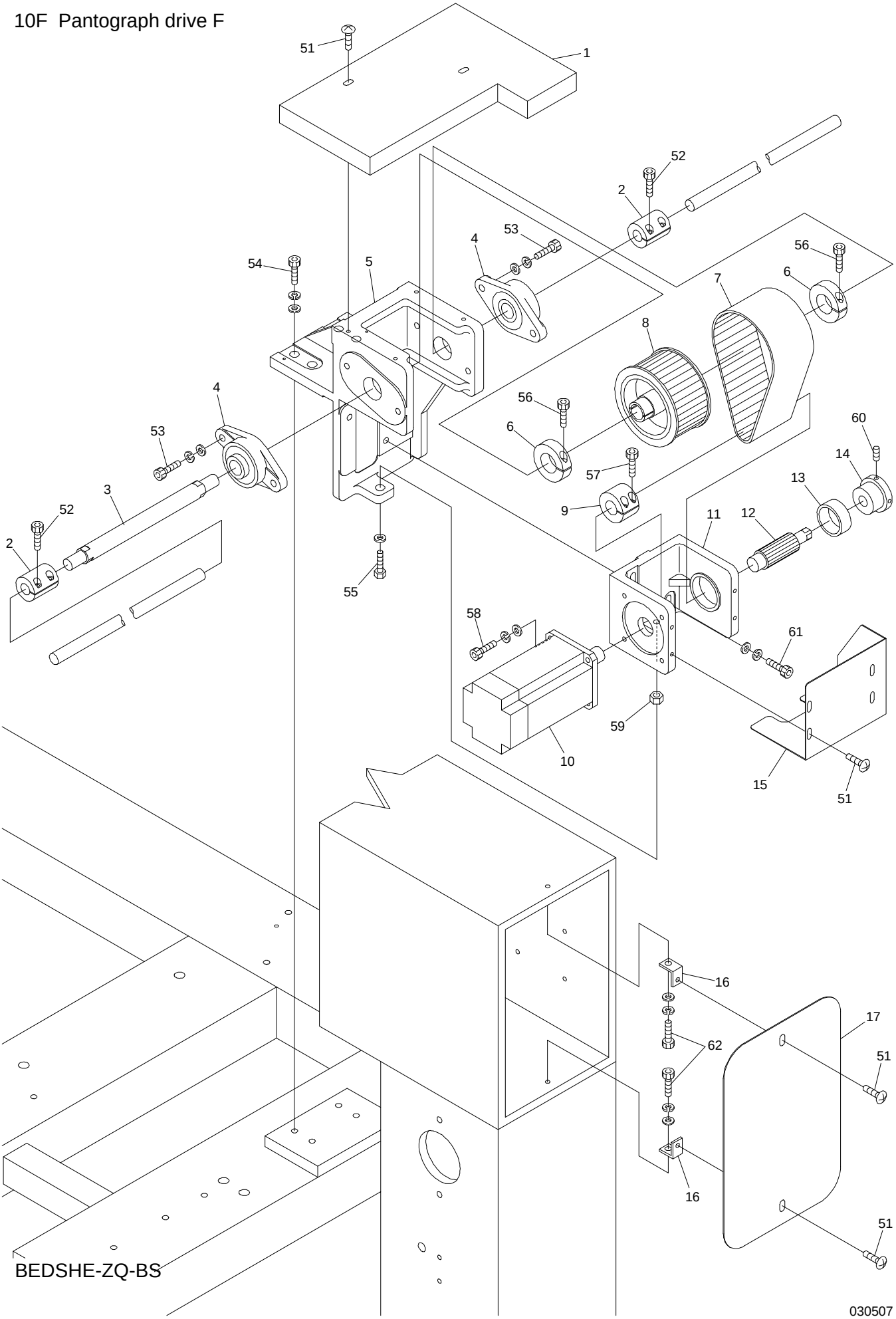

10F Pantograph drive F

ITEM	LIST NO.	DESCRIPTION	Q'TY	NOTE
1	SM250050	V-servo motor unit cover	1	
2	HH481932	Pulse motor coupling	2	
3	RF490071	Pulley shaft	1	
4	A9011240	Bearing unit(UCFL204)	2	
5	RF490011	Bearing bracket	1	
6	RR320041	Clamp	2	
7	RF490061	Timing belt(B500S5M450)	1	
8	RF490041	Pantograph drive pulley large(Shaft side)	1	
9	RF490080	Motor pulley connecting coupling	1	
10	RF490000	AC servo motor(TS4514)	1	
11	RF490021	Motor bracket(H-side)	1	
12	RF490051	Pantograph drive pulley small(Motor side)	1	
13	A9010056	Needle bearing	1	
14	KR480100	Pantograph drive pulley bearing collar	1	
15	RF250041	Pantograph drive unit cover(Lower) NSH	1	
16	RJ250130	Bridge cover stay	1	
17	RR250110	Bridge cover(Large) DS	1	
51		Truss screw M5×8		
52		Hex.socket bolt M5×18		
53		Hex.socket bolt M6×30(With washers)		
54		Hex.socket bolt M8×35(With washers)		
55		Hex.bolt M8×55(With plain washer)		
56		Hex.socket bolt M6×20		
57		Hex.socket bolt M5×16		
58		Hex.socket bolt M6×25(With washers)		
59		Hex.nut M8		
60		Hex.socket set screw M5×10		
61		Hex.socket bolt M8×30(With washers)		
62		Hex.socket bolt M6×15		

11A Control A

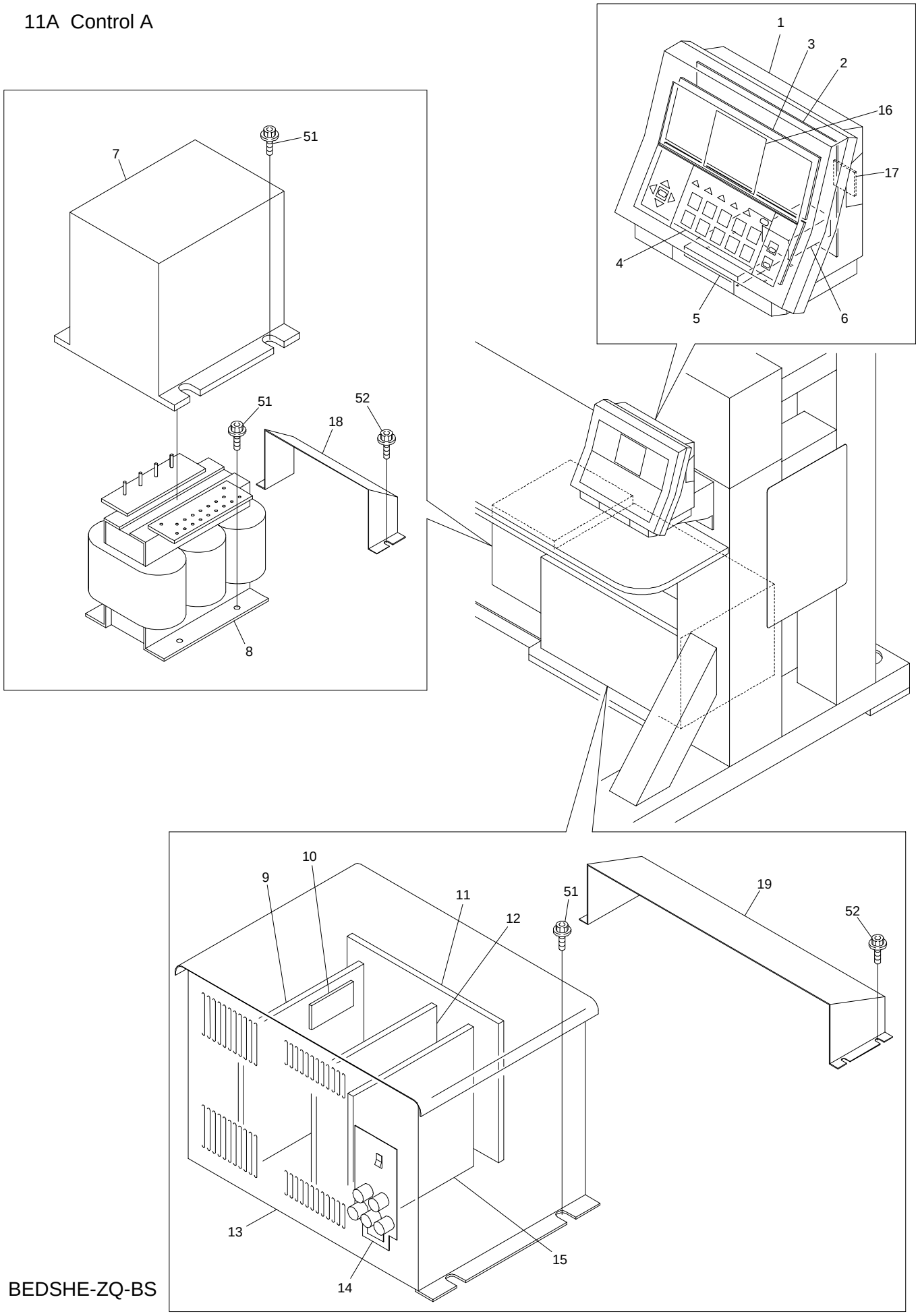

BEDSHE-ZQ-BS

030507

11A Control A

ITEM	LIST NO.	DESCRIPTION	Q'TY	NOTE
1	EAY054A1	DS automat controller	1	
2	EBY02330	CPU board 8310	1	
3	EBY02350	LCD relay board	1	
4	EBY02340	KS-100 board	1	
5	EBY02440	Floppy disk drive(YD-702D)	1	
6	EBY02460	Switching power	1	
7	EBY02470	Transformer cover(SB-4605-3001~3003)DS	1	
8	EAY076A3	DS servo transformer(3P,T1487B)	1	
9	EBY02400	AC servo unit 8451	1	
10	EBY02410	SH board 5775	1	
11	EBY02360	Back board 8410	1	
12	EBY02390	Inverter unit(V2-15-2H100) 8440	1	
13	EAY055A2	DS servo driver(UAD-12)	1	
14	EBY02430	Power control unit 8620	1	
15	EBY02380	CPU board 8430	1	
16	EBY02450	Graphics LCD(LM32019T)	1	
17	A9054054	Compact flash	1	
18	SM510040	Transformer back cover(DSHE ETL)	1	
19	SM510050	Driver back cover(DSHE ETL)	1	
51		Hex.socket flange bolt M6×15		
52		Hex.socket flange bolt M6×10		

11B Control B

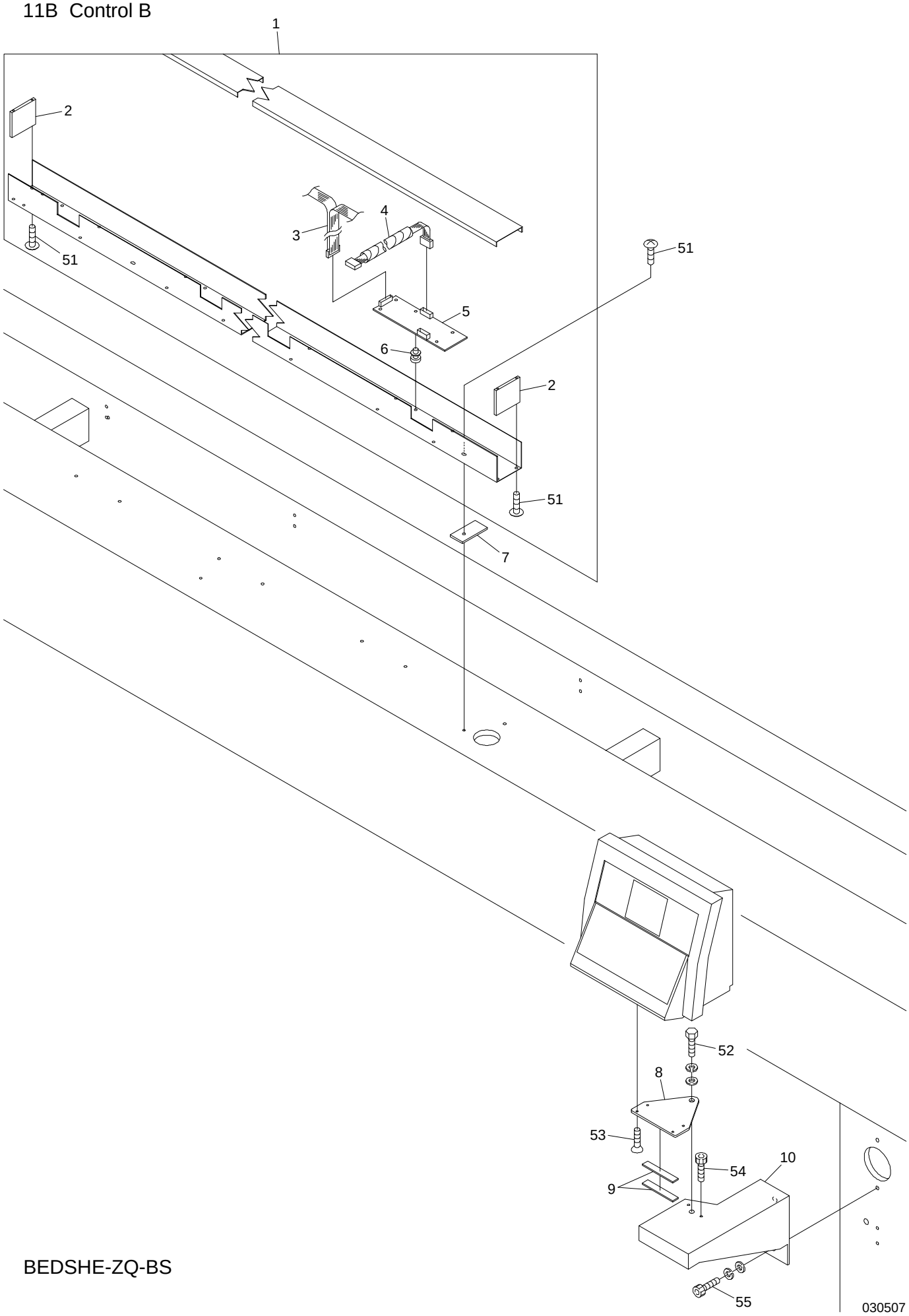

BEDSHE-ZQ-BS

11B Control B

ITEM	LIST NO.	DESCRIPTION	Q'TY	NOTE
1	1USM15380A0	Duct cable set(15T,P380)	1	
	1USM12450A0	Duct cable set(12T,P450)	1	
	1USM12520A0	Duct cable set(12T,P520)	1	
2	KX510060	Duct end cover	2	
3		Flat cable	1	
4	RD510030	Middle harness Z12(Between duct and head)	H×1	
5	EBY01663	8511 Duct board	H×1	
6	A9068033	Locking guard spacer KGLS-6RF	H×5	
7	SM510010	Duct spacer	8	
8	RR510010	Automat bracket(DS)	1	
9	HV330022	Automat bracket spacer	2	
10	RR510150	DSH controller fixing base	1	
51		Truss screw M5×10		
52		Hex.bolt M10×25		
53		Flush screw M4×8		
54		Hex.socket bolt M6×12		
55		Hex.socket bolt M6×20		

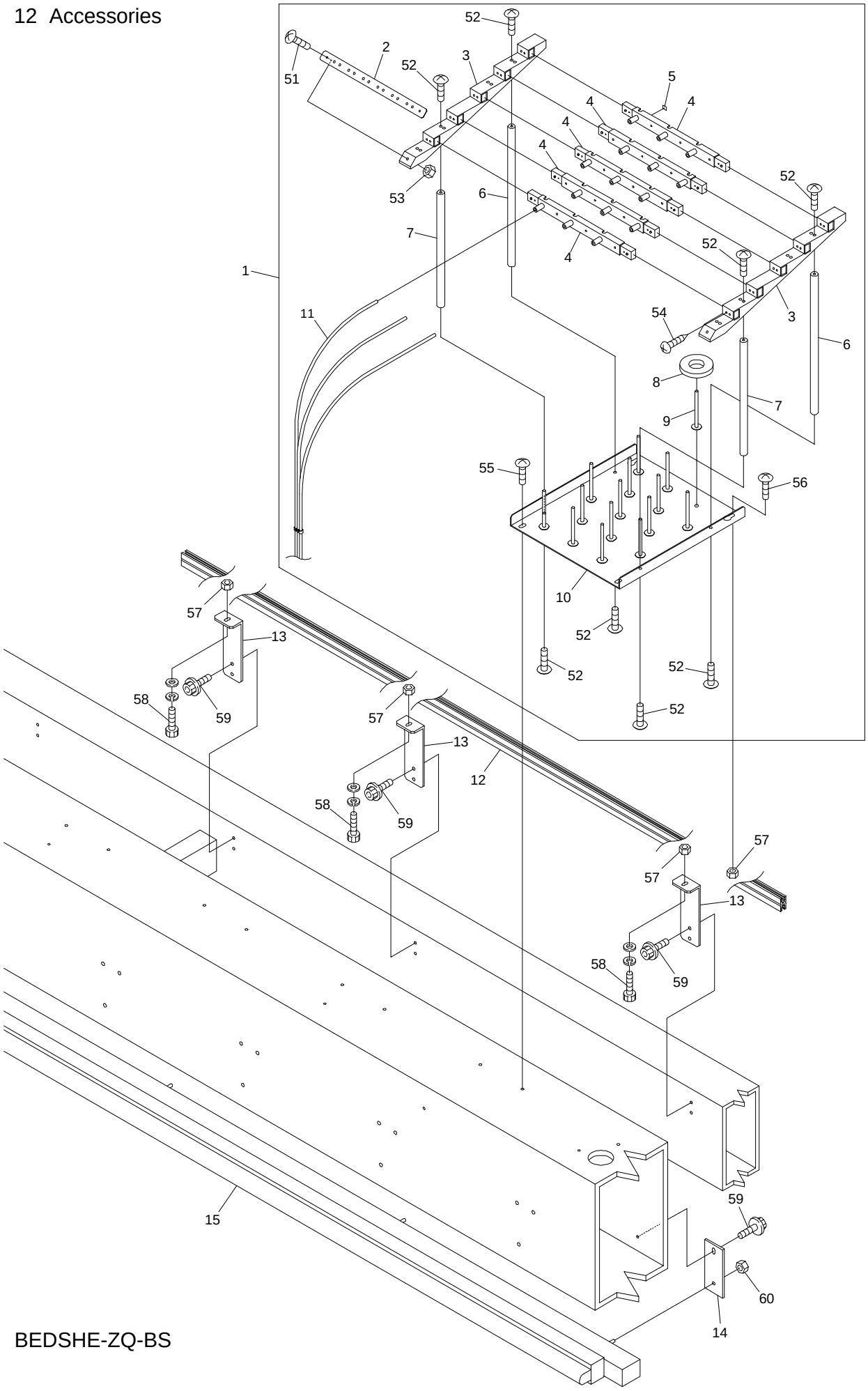
52
2
51
52
3
5
4
4
4
4
53
6
52
7
4
52
1
3
11
54
6
8
7
9
55
56
10
57
13
52
52
58
59
52
57
13
12
58
59
57
57
13
58
59
15
59
60
14

12 Accessories

ITEM	LIST NO.	DESCRIPTION	Q'TY	NOTE
1	SM710020	Spool holder a'ssy(DSHE-ZQ)	H×1	Includes below parts RV240020,RV240100 Truss screw M3×14
2	RD710370	Hose hold bracket	H×1	
3	RD710340	Guide base(15 needles)	H×2	
4	RD710330	Thread guide base	H×5	
5	RD710380	Number seal	H×1	
6	RD710361	Pillar B	H×2	
7	RD710351	Pillar A	H×2	
8	KF710390	Spool holder felt(8×34×f70)	H×15	
9	HT710000	Spool holder pin	H×15	
10	SM710040	Spool holder base(DSHE)	H×1	
11	RD710310	Spool holder tube DB2-6×4		Cut product
12	SM710000	Spool holder rail set(15T,380P)	1	
	SM710030	Spool holder rail set(12T,450P)	1	
	SM710050	Spool holder rail set(12T,520P)	1	
13	SM710010	Spool holder rail bracket	10	
14	SM510000	Fluorescent lamp fixed bracket	8	
15	SM510070	Fluorescent lamp a'ssy(12T×450P,15T×380P)	1	
	SM510080	Fluorescent lamp a'ssy(12T×520P)	1	
51		Truss screw M4×10		
52		Truss screw M5×12		
53		Hex.nut M4		
54		Pan head tapping screw B tight M3×10		
55		Truss screw M6×20		
56		Truss screw M6×12		
57		Hex.nut M6		
58		Hex.socket bolt M6×15(With washers)		
59		Hex.socket flange bolt M6×12		
60		Hex.nut(1/4-20UNC)		

INDEX

LIST No.	SECTION No.	ITEM	LIST No.	SECTION No.	ITEM
1ASM12450450AH1	00A	5	A9013070	00B	8
1ASM12520520AH1	00A	5	A9014059	01A	7
1ASM15380380AH0	00A	5	A9014160	10A	24
1BSM12450450AH1	00B	3	A9014161	00A	8
1BSM12520520AH1	00B	3	A9014162	00A	10
1BSM15380380AH0	00B	3	A9014163	00A	6
1FSM12450450AH0	10A	10	A9014163	00B	17
1FSM12520520AH0	10A	10	A9014166	04C	15
1FSM15380380AH0	10A	10	A9014167	04A	26
1PSM153800	08	24	A9014168	04D	8
1USM12450A0	11B	1	A9019075	00A	17
1USM12520A0	11B	1	A9020180	08	13
1USM15380A0	11B	1	A9052028	02C	3
A9010003	08	8	A9052030	10B	22
A9010004	07	18	A9052031	10B	6
A9010056	10D	19	A9052078	02B	4
A9010056	10F	13	A9052080	04E	6
A9010063	07	6	A9052081	04E	5
A9010065	04B	30	A9053079	07	11
A9010070	10E	4	A9053082	02B	33
A9010073	03	21	A9054054	11A	17
A9011063	10E	19	A9056030	02A	17
A9011111	01A	14	A9056036	05	1
A9011173	02A	22	A9056037	04C	22
A9011240	10D	8	A9056038	02C	1
A9011240	10F	4	A9060063	07	22
A9011259	08	22	A9065092	02B	13
A9012002	02B	8	A9065092	07	15
A9012027	01A	25	A9065106	07	16
A9012052	10B	18	A9065107	02B	33
A9012052	10C	17	A9068032	06	22
A9012052	10E	5	A9068033	11B	6
A9012063	08	9	EAY054A1	11A	1
A9012066	08	6	EAY055A2	11A	13
A9012127	04B	7	EAY076A3	11A	8
A9012127	04C	18	EBY01625	06	19
A9012127	07	7	EBY01650	07	12
A9012208	07	13	EBY01663	11B	5
A9012368	04B	21	EBY02330	11A	2
A9012415	04B	26	EBY02340	11A	4
A9012421	03	22	EBY02350	11A	3
A9012437	10A	2	EBY02360	11A	11
A9012438	06	4	EBY02380	11A	15
A9013066	02A	8	EBY02390	11A	12
A9013069	08	26	EBY02400	11A	9

INDEX

LIST No.	SECTION No.	ITEM	LIST No.	SECTION No.	ITEM
EBY02410	11A	10	HS210020	01A	1
EBY02430	11A	14	HS210021	01A	1
EBY02440	11A	5	HS210031	01A	24
EBY02450	11A	16	HS210042	01A	11
EBY02460	11A	6	HS210051	02A	13
EBY02470	11A	7	HS210060	02A	18
EBY02610	06	18	HS210070	02A	16
FN070011SNY	04A	14	HS210080	02A	21
FR92460304A380A	10A	1	HS210090	02A	23
FR92460354A450A	10A	1	HS210100	02A	12
FR92460434A520A	10A	1	HS210111	02A	10
HB230070	03	24	HS210121	02A	11
HB230080	03	23	HS210142	02A	14
HB230200	04B	11	HS210300	02A	14
HB230220	04C	9	HS220010	01A	4
HB230261	04C	8	HS270030	02B	2
HB230271	04C	3	HS270070	02B	31
HB230281	04C	6	HT220061	01A	5
HB230361	04C	5	HT230120	04A	10
HB230620	03	26	HT230220	05	4
HB230650	03	7	HT230263	04A	6
HB230800	03	10	HT230280	04B	24
HB240020	05	7	HT230290	04B	19
HB240030	05	8	HT230330	04A	5
HB240041	05	9	HT230340	04B	18
HB320070	08	18	HT230380	04C	12
HB320070	10E	22	HT230410	04C	7
HB560060	05	11	HT230450	04B	9
HB560080	05	10	HT230471	04B	4
HB560211	05	12	HT230480	04B	14
HH481932	08	17	HT230491	04B	5
HH481932	10D	1	HT230510	04B	12
HH481932	10F	2	HT230520	04B	20
HH481970	10E	18	HT230560	04B	25
HH481980	10B	13	HT230590	04C	1
HH481980	10C	12	HT230620	05	5
HH481980	10E	10	HT230730	04B	6
HM140120	00B	10	HT230750	04B	3
HM270000	02A	25	HT230760	04B	10
HM270010	02B	6	HT240101	06	10
HP321090	01A	13	HT240180	06	11
HP321140	10B	2	HT240290	06	7
HP321140	10C	2	HT270063	04E	15
HP321710	01B	5	HT270181	02A	3
HP321720	01B	1	HT710000	12	9

INDEX

LIST No.	SECTION No.	ITEM	LIST No.	SECTION No.	ITEM
HV310210	08	2	KX230152	04A	22
HV330022	11B	9	KX230170	07	9
KC250482	01A	19	KX250080	01A	9
KC270101	04C	21	KX250080	02A	2
KC271001	02A	15	KX270000	02A	26
KC271940	02A	20	KX270010	02A	6
KC330180	02B	3	KX270070	02C	12
KC330410	02B	10	KX270430	02A	27
KC330510	02B	9	KX330160	07	5
KF220230	01A	3	KX510060	11B	2
KF220240	01A	20	KX510140	04E	7
KF220290	01A	2	LA230140	04B	28
KF220302	01A	23	LA270080	02C	13
KF220421	01A	22	LA730590	10A	9
KF220530	01A	22	LA730610	10A	7
KF220700	01A	21	LA730630	10A	8
KF221020	01A	23	LA730650	10A	6
KF221040	01A	21	MH230161	05	3
KF230501	03	5	RD230060	04A	18
KF230530	04B	8	RD230130	03	9
KF230680	03	6	RD230150	04B	2
KF230910	04A	9	RD230201	04A	24
KF710390	12	8	RD230250	05	6
KF730500	10A	12	RD230370	04A	8
KL220120	01A	26	RD230480	04A	1
KL220140	01A	8	RD230490	04A	2
KL270091	02C	8	RD240154	06	5
KL270101	02C	9	RD240271	04E	9
KL270120	02C	11	RD270020	02C	14
KL270131	02C	10	RD270040	02C	15
KL270260	02C	2	RD510030	11B	4
KL270450	02C	7	RD710310	12	11
KN271560	02A	24	RD710330	12	4
KN271750	02B	7	RD710340	12	3
KN271782	02B	5	RD710351	12	7
KN272010	02A	9	RD710361	12	6
KN272350	02B	17	RD710370	12	2
KN272401	02A	19	RD710380	12	5
KN272401	02C	5	RF250041	10F	15
KN511020	01B	3	RF480081	10E	21
KN540510	06	9	RF480091	10E	20
KR480100	10D	18	RF480101	10B	12
KR480100	10F	14	RF480101	10C	11
KV230040	04A	4	RF480101	10E	11
KX230141	04A	23	RF480140	10B	17

INDEX

LIST No.	SECTION No.	ITEM	LIST No.	SECTION No.	ITEM
RF480140	10C	16	RJ480080	10E	12
RF480140	10E	3	RN230010	03	17
RF480261	10B	11	RN230020	03	19
RF480261	10C	10	RN230030	03	18
RF480261	10E	9	RN230040	03	20
RF490000	10D	21	RN320010	08	27
RF490000	10F	10	RP310170	08	1
RF490011	10D	9	RQ120080	00B	6
RF490011	10F	5	RQ310000	08	7
RF490021	10D	20	RR230080	04C	4
RF490021	10F	11	RR230090	04C	2
RF490041	10D	14	RR240300	06	8
RF490041	10F	8	RR240330	06	20
RF490051	10D	16	RR240390	06	12
RF490051	10F	12	RR240510	06	6
RF490061	10D	15	RR250011	10D	22
RF490061	10F	7	RR250110	10F	17
RF490071	10D	10	RR320020C	03	15
RF490071	10F	3	RR320030	03	14
RF490080	10D	17	RR320041	10D	13
RF490080	10F	9	RR320041	10F	6
RH230271	03	29	RR480080	10B	14
RH230280	03	28	RR480080	10C	13
RH230300	03	27	RR480080	10E	8
RH230311	03	3	RR510010	11B	8
RH230320	03	13	RR510150	11B	10
RH230330	03	30	RR730010	10A	21
RH230410	04A	3	RR730020	10A	23
RH230440	04A	11	RR730030	10A	26
RH230450	04A	13	RR730050	10A	22
RH230460	04A	12	RV230050	05	13
RH230540	04B	23	RV230060	03	8
RH230550	04B	22	RV230070	03	1
RH230610	03	11	RV230180	04A	29
RH230801	03	2	RV240010	06	13
RH230810	03	4	RV240020	06	3
RJ250040	10A	28	RV240040	06	14
RJ250130	10F	16	RV240050	06	15
RJ250160	08	4	RV240062	06	17
RJ450003	10E	16	RV240071	06	24
RJ450021	10E	7	RV240081	06	23
RJ480041	10E	17	RV240091	06	16
RJ480051	10E	14	RV240100	06	1
RJ480061	10E	1	RV240110	06	2
RJ480070	10E	2	RV250070	04D	1

INDEX

LIST No.	SECTION No.	ITEM	LIST No.	SECTION No.	ITEM
SC120010	00B	9	SG270030	02C	15
SC120030	00B	2	SG270040	02C	13
SC120040	00B	7	SG270050	04C	14
SC140020	00B	20	SG270060	04C	16
SC140030	00B	19	SG270070	04C	17
SC140041	00B	18	SG270081	02C	4
SC140090	00B	4	SG270090	02C	6
SC140120	00A	13	SG270100	02C	14
SC140140	00B	12	SG270110	04C	20
SC140180	00A	11	SG270120	04C	19
SC210000	01A	15	SG270130	04E	13
SC210010	01A	16	SG270140	04E	12
SC250080	01B	4	SG270180	04E	16
SC310000	08	21	SG270190	04C	13
SC310010	08	14	SG330010	07	27
SC310050	08	19	SG330020	07	26
SC310061	08	15	SG330030	07	25
SC310100	08	20	SG330040	07	28
SC330130	01B	2	SG330051	07	1
SC480040	10E	13	SG330060	07	17
SC730092	10A	3	SG330070	07	19
SC730102	10A	4	SG330080	07	20
SC730111	10A	5	SG330090	07	21
SF250100	04E	3	SG330100	07	10
SF250120	04E	3	SG330110	07	4
SF250140	04E	2	SG330120	07	8
SF250150	04E	1	SG330130	07	14
SG230000	04B	17	SG330140	07	3
SG230031	04B	16	SG330151	07	23
SG230170	04B	1	SG330160	07	2
SG230180	04B	13	SG330170	07	24
SG230190	04B	15	SJ140000	00B	21
SG230200	04A	20	SJ140010	00B	16
SG230210	04C	11	SJ140120	00A	9
SG230220	04A	7	SJ140130	00A	12
SG230230	04A	21	SJ210040	02A	18
SG230260	05	2	SJ210080	01A	18
SG230270	04C	10	SJ210090	01A	17
SG230280	04D	4	SJ210120	01A	10
SG230290	04D	3	SJ210150	01A	17
SG230300	04B	29	SJ220010	01A	6
SG230340	03	25	SJ240010	06	21
SG230350	03	16	SJ250060	02B	14
SG250060	04D	6	SJ270010	02A	1
SG270000	04E	14	SJ270020	02A	4

INDEX

LIST No.	SECTION No.	ITEM	LIST No.	SECTION No.	ITEM
SJ270030	02A	7	SM140090	00A	3
SJ270040	02A	5	SM140100	00A	1
SJ270050	02B	15	SM250000	00A	16
SJ270070	02B	11	SM250010	08	12
SJ270080	02B	12	SM250020	08	5
SJ270090	02B	16	SM250030	10D	12
SJ320010	01A	12	SM250040	10D	11
SL210080	03	31	SM250050	10F	1
SL230001	04A	16	SM250110	04E	3
SL230011	04A	16	SM250120	04E	3
SL230021	04A	17	SM250140	03	32
SL230031	04A	19	SM250150	10D	6
SL230040	04A	25	SM250160	04E	4
SL230070	04A	15	SM250170	10D	5
SL230080	04A	27	SM250180	10D	4
SL230090	04A	28	SM310000	08	25
SL230130	03	12	SM310010	08	16
SL230140	04A	33	SM310020	08	11
SL230150	04A	31	SM310030	08	10
SL230160	04A	30	SM450000	10B	21
SL230170	04A	32	SM450010	10B	23
SL230180	04B	27	SM470000	10D	7
SL250000	04E	8	SM470010	10D	2
SL250010	04E	3	SM470020	10D	3
SL250020	04E	3	SM480000	10A	14
SL250080	04D	5	SM480010	10A	19
SL250090	04D	7	SM480020	10A	11
SL250110	04D	2	SM480030	10A	13
SL250130	04D	2	SM48004A380	10A	17
SL250140	04D	2	SM48005A380	10A	18
SL270000	04E	10	SM480060	10B	4
SL270010	04E	11	SM480060	10C	4
SL270020	04E	18	SM480070	10B	10
SL270030	04E	17	SM480070	10C	9
SM120000	00B	5	SM480080	10B	20
SM120010	00B	1	SM480080	10C	19
SM140000	00B	13	SM480090	10B	24
SM140010	00B	14	SM480090	10C	20
SM140020	00B	15	SM480100	10B	25
SM140030	00B	11	SM480100	10C	21
SM140040	00A	14	SM480110	10B	16
SM140050	00A	7	SM480110	10C	15
SM140060	00B	22	SM480120	10B	15
SM140070	00A	4	SM480120	10C	14
SM140080	00A	2	SM480130	10B	9

INDEX

LIST No.	SECTION No.	ITEM	LIST No.	SECTION No.	ITEM
SM480130	10C	8			
SM480140	10B	3			
SM480140	10C	3			
SM480150	10B	5			
SM480150	10C	5			
SM480160	10B	1			
SM480160	10C	1			
SM480170	10C	7			
SM480180	10B	7			
SM480180	10C	6			
SM480190	10B	8			
SM48020A380	10E	15			
SM48020B450	10E	15			
SM48020B520	10E	15			
SM480210	10E	6			
SM480220	10E	23			
SM48023A380	10A	27			
SM480260	08	23			
SM480290	10B	19			
SM480290	10C	18			
SM480300	10A	20			
SM480310	10A	15			
SM480320	10A	16			
SM490000	08	3			
SM510000	12	14			
SM510010	11B	7			
SM510040	11A	18			
SM510050	11A	19			
SM510070	12	15			
SM510080	12	15			
SM710000	12	12			
SM710010	12	13			
SM710020	12	1			
SM710030	12	12			
SM710040	12	10			
SM710050	12	12			
SM720001	00A	15			
SM730000	10A	25			