Barudan

HIGH SPEED AUTOMATIC EMBROIDERY MACHINE

BENYME-ZN/ZQ-A
BENBME-ZN/ZQ-A

4/6 HEAD MODELS

PARTS LIST

Copyright 4/01

Barudan America, Inc.
29500 Fountain Parkway
Solon, Ohio 44139 USA

Part Numbers are subject to change due to continuing improvements.

BENYME-ZN/ZQ-A
BENBME-ZN/ZQ-A
HIGH SPEED AUTOMATIC EMBROIDERY MACHINE

Contents

Machine Layout

00	Table Frame
01A	Head-Bed A
01B	Head-Bed B
02A	Thread Cut A
02B	Thread Cut B
02C	Thread Cut C
02D	Thread Cut D
03-1	Take Up Lever (ZN)
03-2	Take Up Lever (ZQ)
04A-1	Needle Bar A (ZN)
04A-2	Needle Bar A (ZQ)
04B	Needle Bar B
04C	Needle Bar C
05	Jump
06A-1-1	Thread Guide A (Standard) (ZN)
06A-1-2	Thread Guide A (Standard) (ZN) (First Head)

Contents

06A-2 Thread Guide A (Standard) (ZQ)

06B-1 Thread Guide B (UTSM) (ZN)

06B-2 Thread Guide B (UTSM) (ZQ)

07A-1 Color Change A (ZN)

07A-2 Color Change A (ZQ)

07B Color Change B

08 Drive

09 Connecting Shaft

10A Pantograph Drive A

10B-1 Pantograph Drive B

10B-2 Pantograph Hoop Support Arm

10C Pantograph Drive C (H-Drive)

10D Pantograph Drive D

10E Pantograph Drive E

10F Pantograph Drive F (V-Drive)

10G Pantograph Drive G

11A-1-1 Control A (NY)

11A-1-2 Control A (NY-2)

11A-2 Control A (NB)

11B Control B

12-1 Accessories (ZN)

12-2 Accessories (ZQ)

MACHINE LAYOUT (BENYME-ZN)

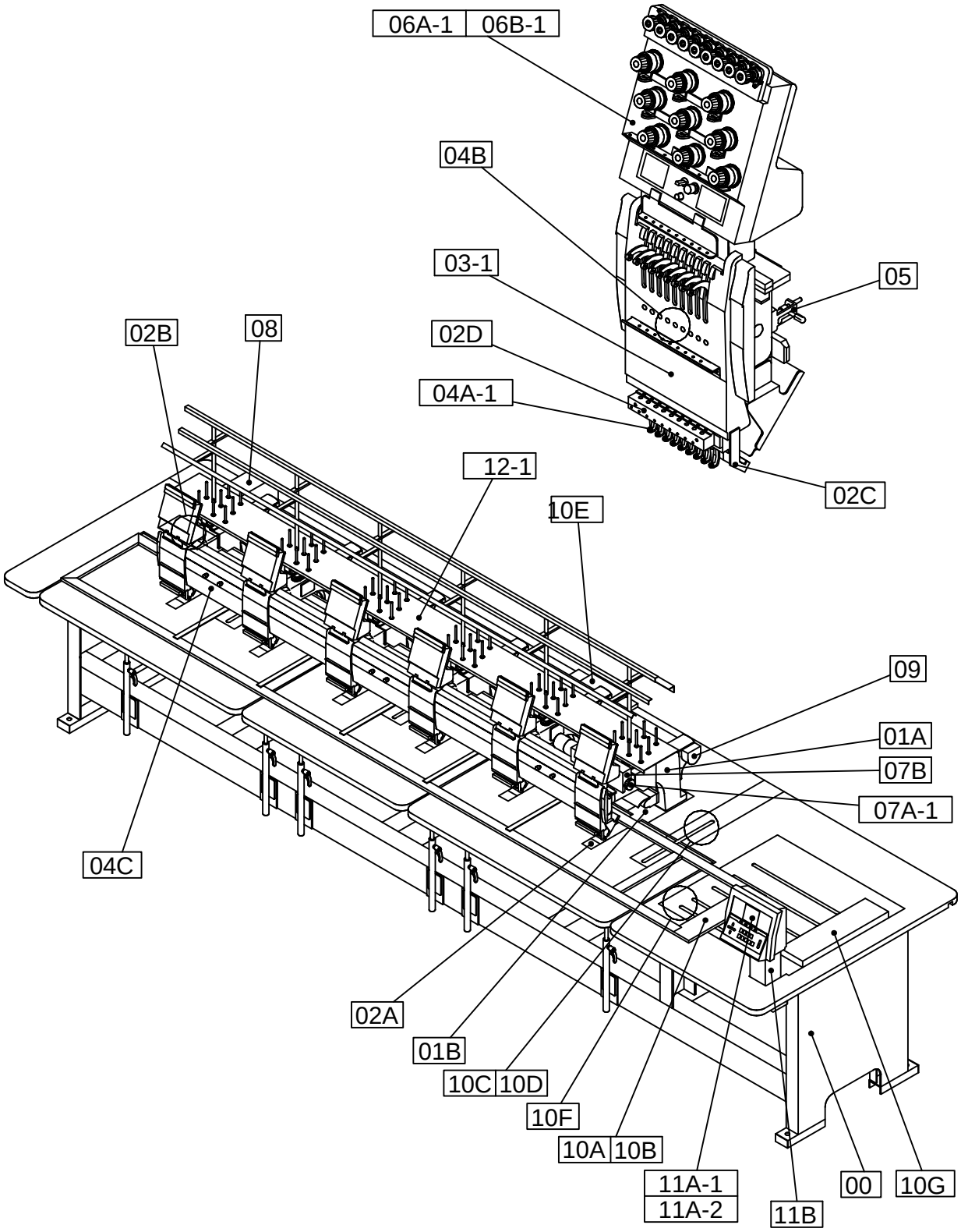

BENYME-ZN
BENBME-ZN

MACHINE LAYOUT (BENYME-ZQ)

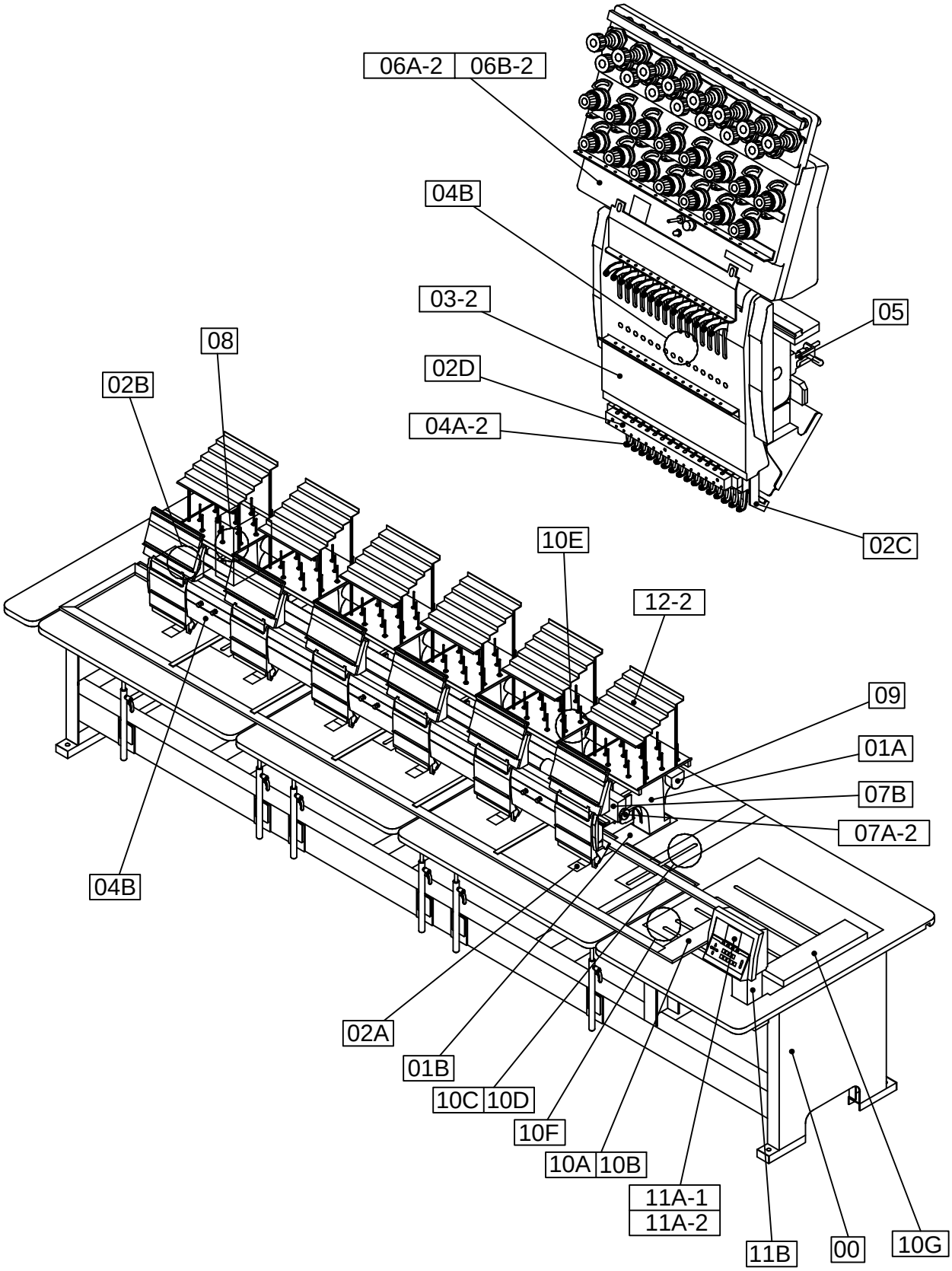

BENYME-ZQ
BENBME-ZQ

00 TABLE FRAME

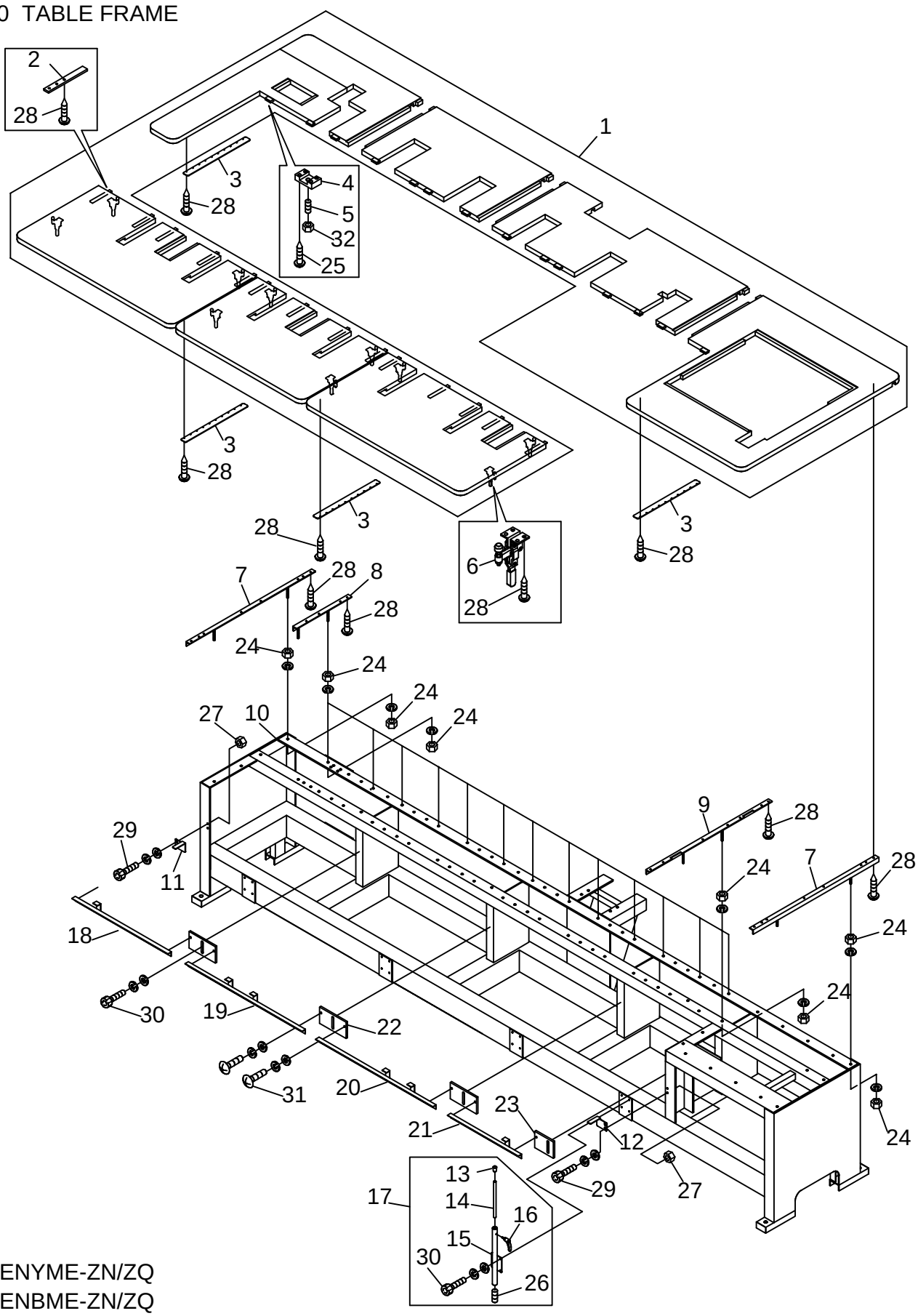

BENYME-ZN/ZQ
BENBME-ZN/ZQ

00 Table Frame

(*Depends on machine type)

ITEM	LIST NO.	DESCRIPTION	QTY	NOTE
1.	A100476	Table Top, ZQ/ZNA (4-520)	1	*
	A100457	Table Top, ZQ/ZNA (6-520)	1	*
2.	A100346	Locating Stud	21	*
3.	A100464	ZQ/ZNA Table Support Plate (472)	4	*
4.	A200012	Alignment Bracket	14	*
5.	A200051	Ball Plunger (5/16-18)	14	*
6.	A100286	Vertical Flange Base Clamp (#202)	10	*
7.	A100447	ZQ/ZNA Table Mounting Bracket (1000)	2	*
8.	A100449	ZQ/ZNA Table Mounting Bracket (440)	13	*
9.	A100448	ZQ/ZNA Table Mounting Bracket (975)	1	*
10.	A100475	Frame, NYME-ZQ/ZNA-4 (320x520)	1	*
	A100458	Frame, NYME-ZQ/ZNA-6 (320x520)	1	*
11.	A100467	ZQ/ZNA Table Support Bracket-Left	1	
12.	A100468	ZQ/ZNA Table Support Bracket-Right	1	
13.	A100296	Table Support Flex-Cap	6	*
14.	A100284	Table Support Shaft	6	*
15.	A100470	ZQ/ZNA Table Support Weldment	6	*
16.	A100335	Table Support Knob	6	*
17.	A100469	ZQ/ZNA Table Support Assembly	4	*
18.	A100460	ZQ/ZNA Lower Support Bracket (1002)	1	*
19.	A100461	ZQ/ZNA Lower Support Bracket (788)	1	Not Used On 4 Head
20.	A100462	ZQ/ZNA Lower Support Bracket (902)	1	Not Used On 4 Head
21.	A100463	ZQ/ZNA Lower Support Bracket (950)	1	*
22.	A100465	ZQ/ZNA Lower Mounting Plate (95)	3	*
23.	A100466	ZQ/ZNA Lower Mounting Plate (66)	1	
24.		Hex Nut M10		
25.		#8 –18 x 1 ¼” (Tek)		
26.		Screw, ¾ - 10 x 1” Socket Set (Self Locking)		
27.		Hex Nut M8		
28.		#8 –18 x 1” (Tek)		
29.		Hex Socket Bolt M8x15		
30.		Hex Socket Bolt M6x15		
31.		Truss Screw M6x10		
32.		Nut, 5/16-18 Hex		

01A HEAD BED A

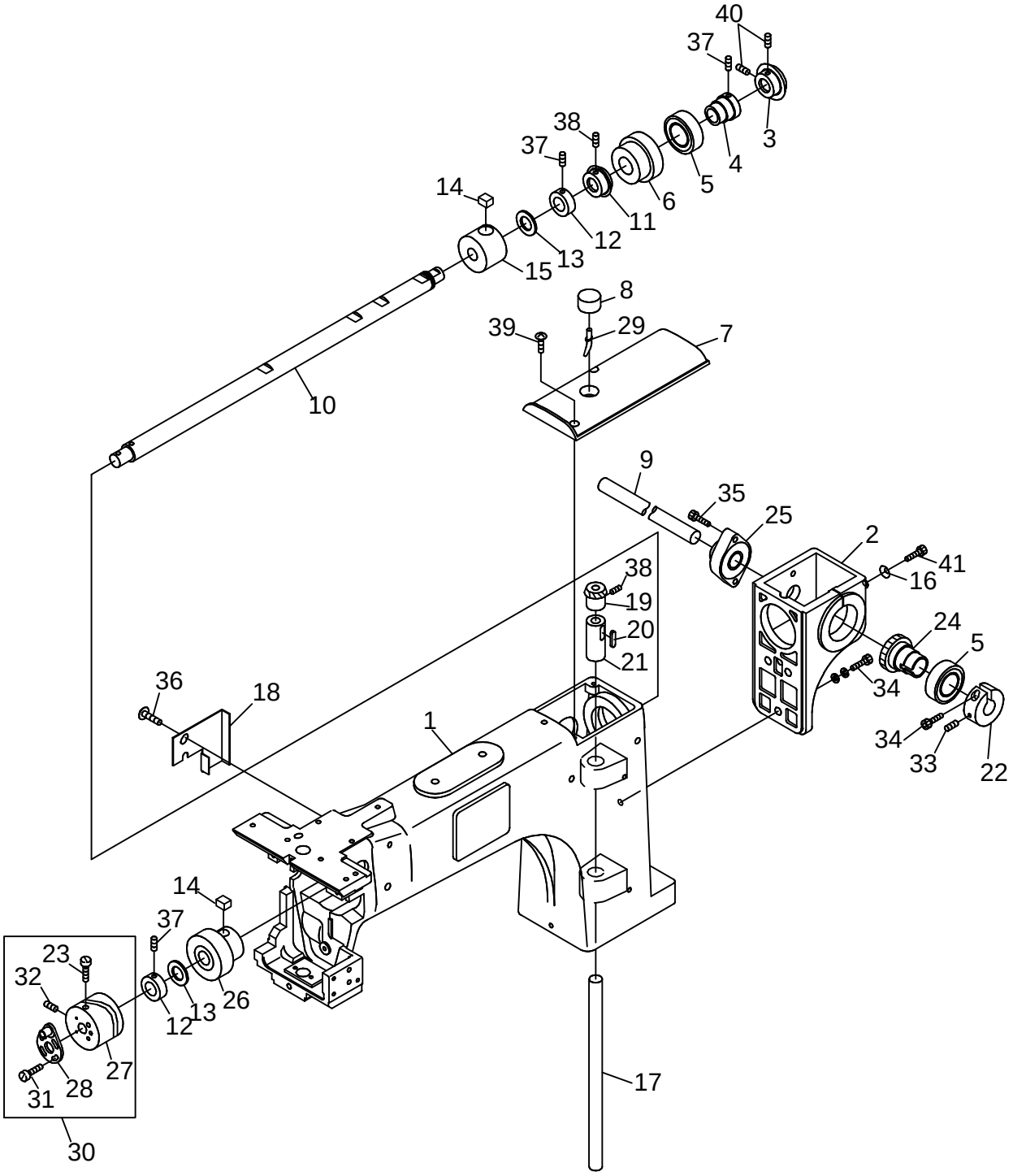

BENYME-ZN/ZQ
BENBME-ZN/ZQ

01A Head-Bed A

(H=Head Qty)

ITEM	LIST NO.	DESCRIPTION	QTY	NOTE
1.	LA210010	Arm (ZN-A)	Hx1	
2.	KL210040	Arm Gear Case	Hx1	
3.	KL220100	Upper Shaft Gear (Spiral Bevel M1.5-25R)	Hx1	
4.	KL220090	Upper Shaft Rear Bearing Collar	Hx1	
5.	A9010017	Bearing (6004ZZ)	Hx2	
6.	KL220040	Upper Shaft Rear Bearing Case	Hx1	
7.	KL250040	Arm Top Cover	Hx1	
8.	KL220150	Oil Felt D	Hx1	
9.	LB310100	Main Shaft, Keyed (15mm X 12') (ZQ/ZNA)	1	Cut Product
10.	KL220000	Upper Shaft	Hx1	
11.	KF220130	Bevel Gear (Upper Shaft)	Hx1	
12.	KL220080	Upper Shaft Collar	Hx2	
13.	HP231390	Thrust Washer (Upper Shaft Gear)	Hx2	
14.	KL220130	Oil Felt B	Hx2	
15.	KL220030	Upper Shaft (Middle Metal)	Hx1	
16.		Disk Spring (M6)		
17.	KL220010	Vertical Shaft	Hx1	
18.	KL250051	Arm Side Cable Cover	Hx1	
19.	KF220460	Bevel Gear (Vertical Shaft Upper)	Hx1	
20.	KL220140	Oil Felt C	Hx1	
21.	KL220050	Vertical Shaft Metal (Upper)	Hx1	
22.	KL320020	Connecting Gear Clamp (19.0 Dia.)	Hx1	
23.	KF230420	Take Up Lever Cam Set Screw	Hx1	
24.	KL320000	Connecting Gear (Spiral Bevel M1.5-25L)	Hx1	
25.	HP321140	Upper Shaft Connecting Unit	Hx1	
26.	KL220020	Upper Shaft Front Metal	Hx1	
27.	KB230030	Take Up Lever Cam (K6)	Hx1	
28.	KB230050	90º Crank	Hx1	
29.	KC251330	Oil Core (L=75)	Hx1	
30.	KB230011	Take Up Cam (K6 Assembly)	Hx1	
31.	A9012007	Bobbin Fixing Screw (SM11/64-40x7)	Hx1	
32.		Set Screw (SM15/64-28x10, with Adhesive)		
33.		Hex Socket Set Screw M6x10		
34.		Hex Socket Bolt M6x25		
35.		Hex Socket Bolt M6x8 (with Spring Washer)		
36.		Truss Screw M4x8		
37.		Hex Socket Set Screw M6x6		
38.		Set Screw (SM1/4-40x4)		
39.		Truss Screw M4x10		
40.		Hex Socket Set Screw M6x6 (with Adhesive)		
41.		Hex Socket Bolt M6x60		

01B HEAD BED B

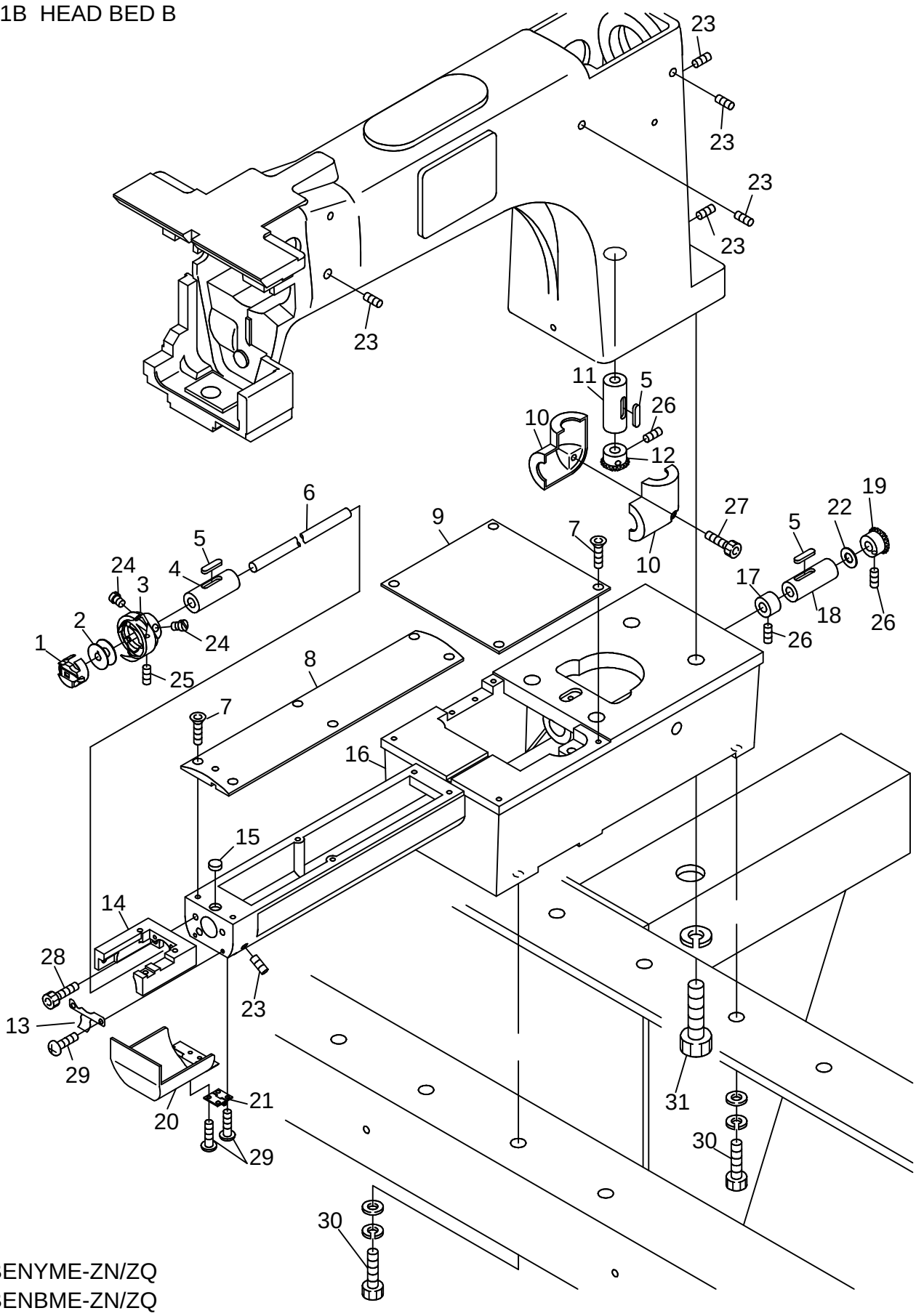

BENYME-ZN/ZQ
BENBME-ZN/ZQ

01B Head-Bed B

(H=Head Qty)

ITEM	LIST NO.	DESCRIPTION	QTY	NOTE
1.	KF220981	Bobbin Case (SC35-BNS-3)	Hx1	
2.	KF220530	Bobbin (with Knurl)	Hx1	
3.	KF220710	Sewing Hook (Teflon, KHS12-RYPBNW)	Hx1	
4.	KF220230	Lower Shaft Metal (Front)	Hx1	
5.	KL220140	Oil Felt C	Hx3	
6.	KC220210	Lower Shaft	Hx1	
7.	KX250080	Needle Plate Set Screw (Hex Socket)	Hx10	
8.	LA250030	Cylinder Bed Cover	Hx1	
9.	LA250040	Cylinder Bed Cover A	Hx1	
10.	KF220271	Gear Cover Set	Hx1	
11.	KL220060	Vertical Shaft Metal (Lower)	Hx1	
12.	KF220470	Bevel Gear (Vertical Shaft Upper)	Hx1	
13.	KC250482	Barrel Bed Cover Pressure Spring	Hx1	
14.	LA210080	Needle Plate Base	Hx1	
15.	KL220120	Oil Felt A	Hx1	
16.	LA210070	Cylinder Bed	Hx1	
17.	KF220290	Lower Shaft Collar	Hx1	
18.	KL220070	Lower Shaft Metal (Rear)	Hx1	
19.	KF220480	Bevel Gear (Lower Shaft)	Hx1	
20.	HS210030	Barrel Bed Cover	Hx1	
21.	A9012027	Hinge (TH-TM-72)	Hx1	
22.	HT220061	Thrust Washer (Lower Shaft)		
23.		Hex Socket Set Screw M6x8		
24.		Screw (SM11/65-40x5)		
25.		Screw (SM11/65-40x4)		
26.		Screw (SM1/4-40x4)		
27.		Hex Socket Bolt M5x25		
28.		Hex Socket Bolt M5x15		
29.		Pan Screw M3x6		
30.		Hex Socket Bolt M8x30 (with Washers)		
31.		Hex Socket Bolt M12x35 (with Spring Washer)		

02A THREAD CUT A

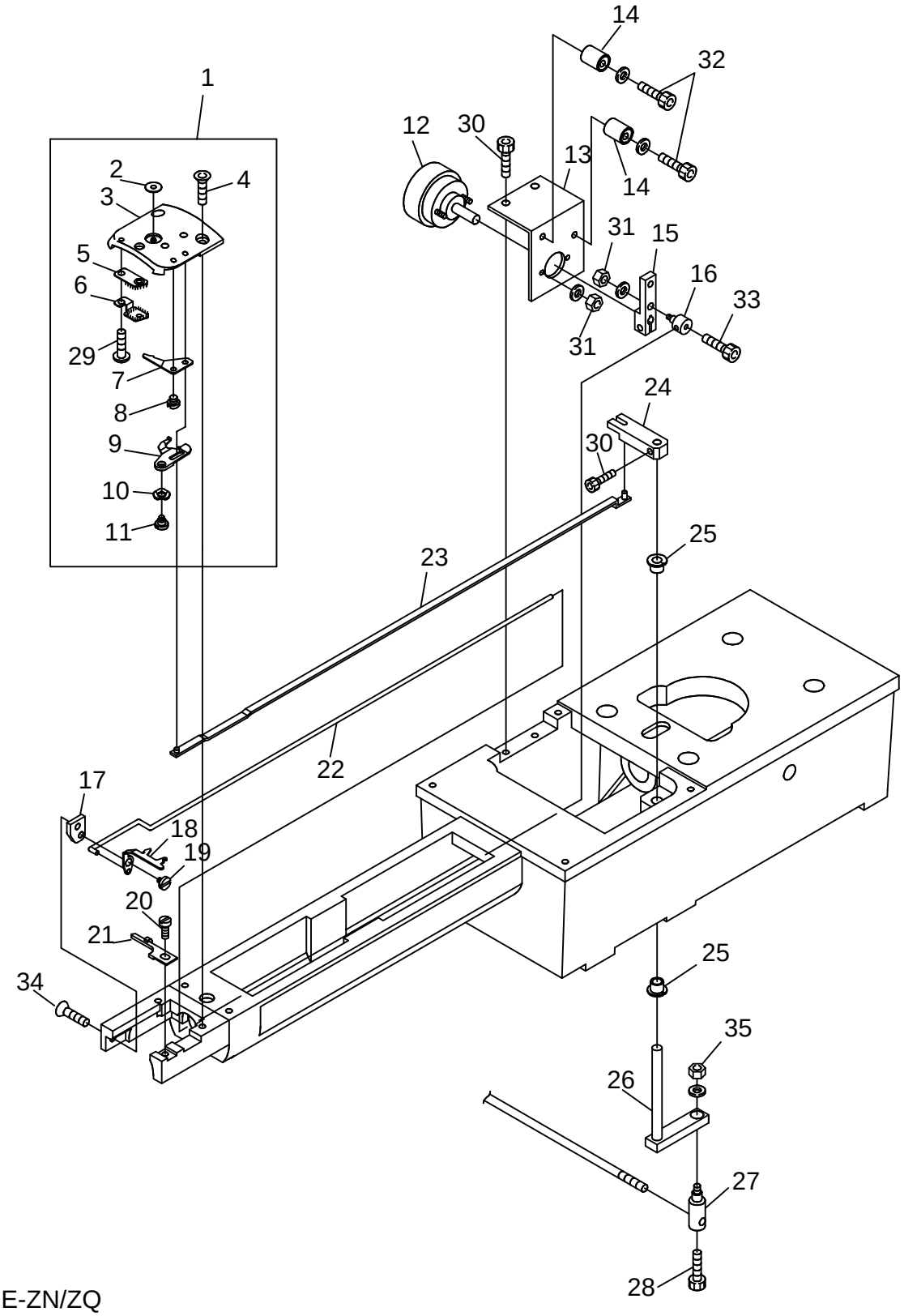

BENYME-ZN/ZQ
BENBME-ZN/ZQ

02A Thread Cut A

(H=Head Qty)

ITEM	LIST NO.	DESCRIPTION	QTY	NOTE
1.	KX270281	Throat Plate Assembly (MK-5)	Hx1	With Washer
	ZKX270282	Throat Plate Assembly, ZN/ZQA (MK-5)		Without Washer
2.	KX270380	Urethane Washer	Hx1	
3.	KX270022	Throat Plate, ZN/ZQA (MK-5)	Hx1	
4.	KX250080	Throat Plate Set Screw (Hex Socket)	Hx2	
5.	HT270160	Bobbin Thread Support Stay Upper	Hx1	
6.	HT270180	Bobbin Thread Support Stay Lower	Hx1	
7.	KN270961	Fixed Knife	Hx1	
8.	KX270010	Fixed Knife Set Screw	Hx1	
9.	KN270952	Driving Knife	Hx1	
10.	A9013066	Wave Washer (WW-5SK)	Hx1	
11.	KC270970	Lower Thread Knife Turning Shaft	Hx1	
12.	A9056030	Rotary Solenoid,Trimmer Fork (M960371R) (ETL)	Hx1	
13.	LA270040	Solenoid Stay	Hx1	
14.	KN272400	Stopper Eccentric	Hx2	
15.	KC271940	Solenoid Lever A	Hx1	
16.	HS210080	Connecting Clamp	Hx1	
17.	HS210050	Fork Fixing Stay	Hx1	
18.	HS210143	Trimmer Fork (Small Bobbin)	Hx1	
19.	KC271002	Upper Thread Knife Turning Shaft	Hx1	
20.	A9012007	Bobbin Fixing Screw	Hx1	
21.	KX270000	Hook Position Bracket	Hx1	
22.	LA270020	Fork Driving Rod	Hx1	
23.	LA270010	Lower Thread Knife Driving Rod	Hx1	
24.	KC271120	Lower Thread Knife Driving Lever (Upper)	Hx1	
25.	A9012114	DU Bushing with Flange (MB0505-10FDU)	Hx2	
26.	LA270030	Lower Thread Knife Driving Lever (Lower)	Hx1	
27.	KF230640	Lock Connecting Bar Clamp	Hx1	
28.		Hex Socket Bolt M4x8		
29.		Pan Screw M3x3		
30.		Hex Socket Bolt M4x6		
31.		Hex Nut M3		
32.		Hex Socket Bolt M4x18		
33.		Hex Socket Bolt M3x5		
34.		Hex Socket Flush Screw M4x6		
35.		Hex Nut M4		

02B THREAD CUT B

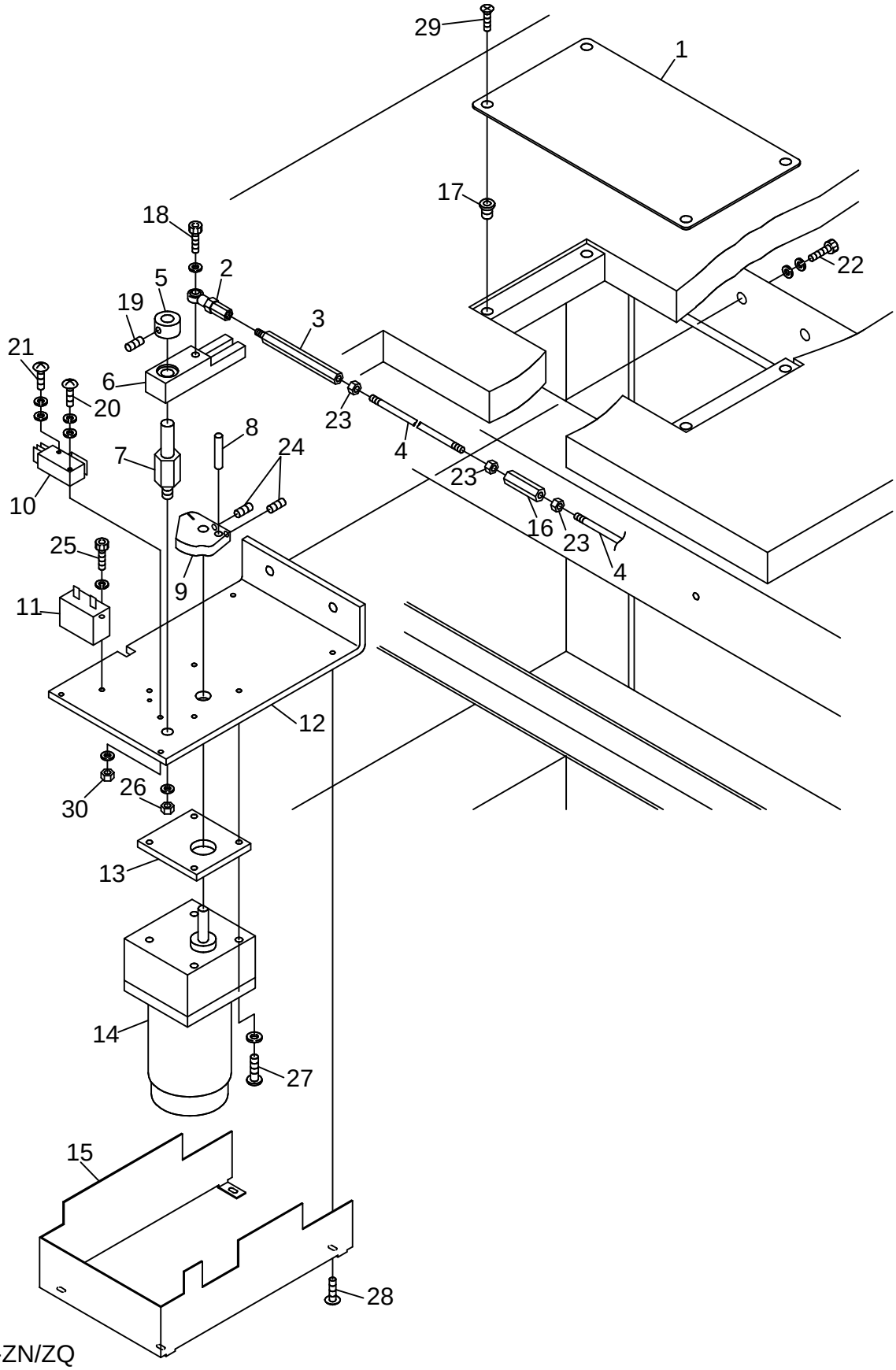

BENYME-ZN/ZQ
BENBME-ZN/ZQ

02B Thread Cut B

ITEM	LIST NO.	DESCRIPTION	QTY	NOTE
1.	KC271440	Trimmer Cover Plate	1	
2.	A9012002	Uniball Joint (PR-6)	1	
3.	KC330510	Hex Connecting Rod (L)	1	
4.	KC330410	Lock Connecting Rod (2M)	3	Cut Product
5.	KC330180	Collar (10.0 Dia.)	1	
6.	KC271141	Motor Lever	1	
7.	KC271151	Motor Lever Rotary Shaft	1	
8.	KN272350	Drive Pin (L=35)	1	
9.	KS270030	Drive Cam, ME (MK-5)	1	
10.	A9052078	Micro Switch (D2VW-01L2A-1)	1	
11.	A9054041	Condenser (4uf-200V)	1	
12.	LA270050	Motor Bracket	1	
13.	KC271430	Motor Spacer	1	
14.	A9065088	Trimmer Motor (RM-H6A8PE-AA3526RH) (ETL)	1	
15.	LA270060	Motor Bracket Cover	1	
16.	HH330770	Hex Connecting Rod (L=35)	2	
17.	A100140	# 8-32 Wood Insert		
18.		Hex Socket Bolt M6x20		
19.		Hex Socket Set Screw M5x6		
20.		Truss Screw M3x20		
21.		Truss Screw M3x15		
22.		Hex Socket Bolt M8x25		
23.		Hex Nut M5		
24.		Hex Socket Set Screw M5x8		
25.		Hex Socket Bolt M4x8		
26.		Hex Nut M8		
27.		Pan Screw M5x65		
28.		Truss Screw M4x6		
29.		# 8-32 x 3/8” Phillips Flat Undercut Screw		
30.		Hex Nut M3		

02C THREAD CUT C

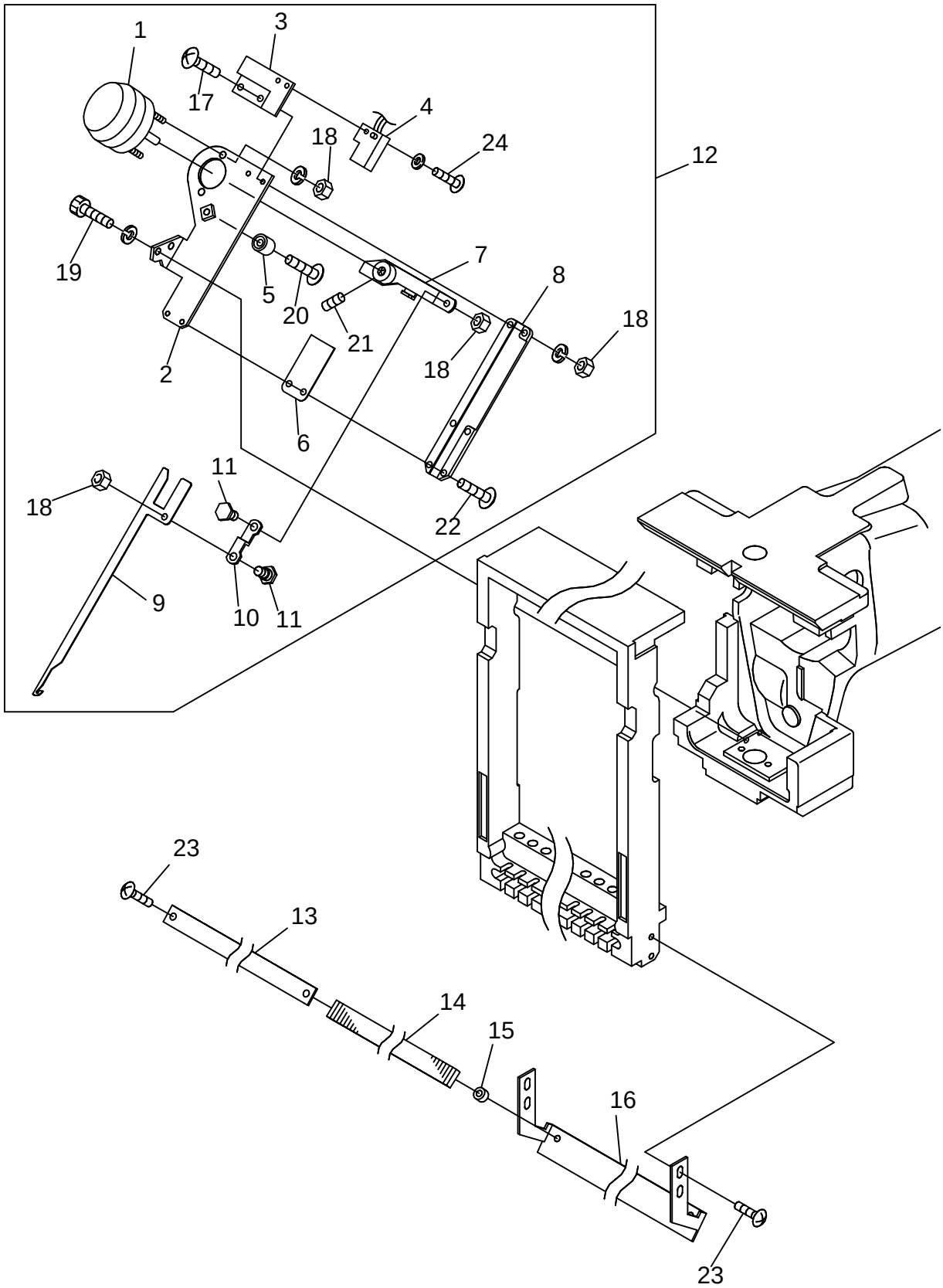

BENYME-ZN/ZQ
BENBME-ZN/ZQ

02C Thread Cut C

(H=Head Qty)

ITEM	LIST NO.	DESCRIPTION	QTY	NOTE
1.	A9056031	Rotary Solenoid, Slider (M970385R) (ETL)	Hx1	
2.	LA270100	Thread Away Base	Hx1	
3.	KL270260	Switch Stay	Hx1	
4.	A9052028	Proximity Switch (RS-603)	Hx1	
5.	KN272401	Stopper Eccentric	Hx1	
6.	KL270450	Hook Guide Plate	Hx1	
7.	KL270110	Thread Away Solenoid Lever	Hx1	
8.	KL270091	Thread Away Hook Guide	Hx1	
9.	KL270101	Thread Away Hook	Hx1	
10.	KL270120	Connecting Plate, Slider Lever	Hx1	
11.	KL270130	Lever Connecting Pin	Hx2	
12.	LA270140	Thread Away Assy	Hx1	
13.	KX270050	Thread Guard Disk (Upper)	Hx1	ZN
	RD270040	Thread Guard Disk (Upper)	Hx1	ZQ
14.	KX270370	Thread Keep Plate (ZN)	Hx2	ZN
	RD270020	Thread Keep Plate (ZQ)	Hx2	ZQ
15.	KX270070	Thread Guard Disk Spacer	Hx2	
16.	LA270120	Thread Guard Disk Bracket (ZN-A)	Hx1	ZN
	LA270080	Thread Guard Disk Bracket (ZQ-A)	Hx1	ZQ
17.		Truss Screw M3x10		
18.		Hex Nut M4 (with Spring Washer)		
19.		Hex Socket Bolt M4x12 (Spring Washer)		
20.		Truss Screw M4x16		
21.		Hex Socket Set Screw M4x8		
22.		Truss Screw M3x6		
23.		Truss Screw M4x8		
24.		Truss Screw M3x6 (with Plain Washer)		

02D THREAD CUT D

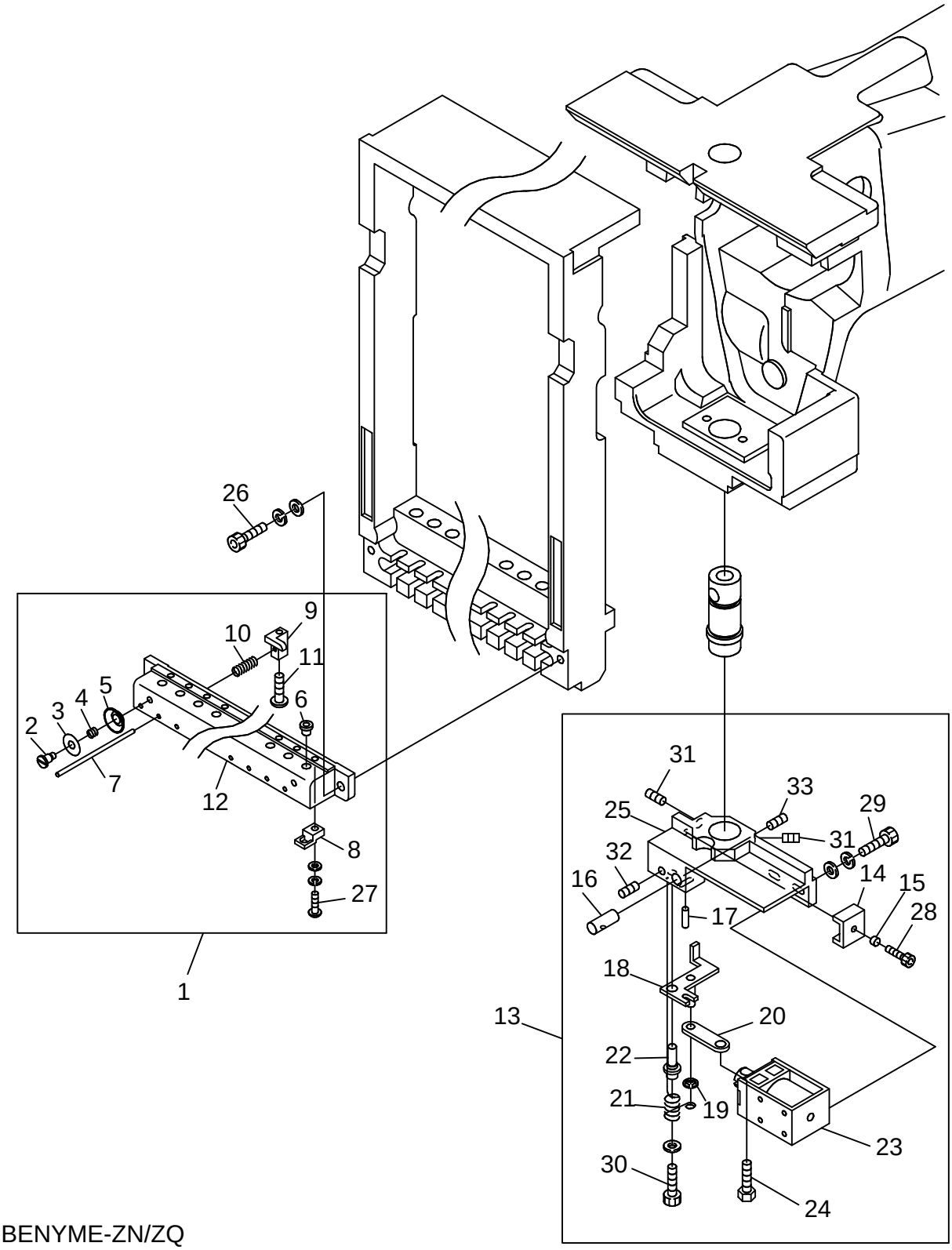

BENYME-ZN/ZQ
BENBME-ZN/ZQ

02D Thread Cut D

(H=Head Qty)

ITEM	LIST NO.	DESCRIPTION	QTY	NOTE
1.	KX270230	Thread Support Apron Assembly (ZN)	Hx1	ZN
	RD270050	Thread Support Apron Assembly (ZQ)	Hx1	ZQ
2.	KF250250	Thread Hook Shaft Screw		ZN-Hx2, ZQ-Hx3
3.	KF250231	Thread Guard Spring Holder		ZN-Hx2, ZQ-Hx3
4.	KF250241	Thread Hook Spring		ZN-Hx2, ZQ-Hx3
5.	KF250220	Thread Guard Disk		ZN-Hx2, ZQ-Hx3
6.	KF230582	Ceramic Thread Guide		ZN-Hx9, ZQ-Hx15
7.	KX270110	Thread Support Pin (ZN/ZQA)		ZN-Hx9, ZQ-Hx15
8.	KX270100	Thread Support Block		ZN-Hx9, ZQ-Hx15
9.	KX270090	Thread Support Clamp		ZN-Hx9, ZQ-Hx15
10.	KX270120	Thread Support Spring		ZN-Hx9, ZQ-Hx15
11.	HT270062	Thread Support Clamp Set Screw		ZN-Hx9, ZQ-Hx15
12.	KX270080	Thread Support Apron (ZNA)	Hx1	ZN
	RD270010	Thread Support Apron (ZQA)	Hx1	ZQ
13.	LA270130	Thread Support Assembly (ZN/ZQA)	Hx1	
14.	HT230520	Needle Bar Driver Stopper	Hx1	
15.	A9012368	Spacer (Bushing)	Hx1	
16.	KX270360	Thread Support Push Rod	Hx1	
17.	KX270320	Thread Support Push Pin	Hx1	
18.	LA270090	Thread Support Lever	Hx1	
19.	A9012127	E-ring (3.0 Dia.)	Hx1	
20.	KX270310	Thread Support Link	Hx1	
21.	KX270350	Thread Support Return Spring	Hx1	
22.	KX270300	Thread Support Lever Pin	Hx1	
23.	A9056037	Thread Keep Solenoid (TDS-K10SL-306A) (ETL)	Hx1	With Cover
24.	KC270101	Solenoid Pin	Hx1	
25.	LA270070	Thread Support Base	Hx1	
26.		Hex Socket Bolt M4x12 (with Washers)		
27.		Hex Socket Button Bolt M3x10 (with Washers)		
28.		Hex Socket Bolt M3x6		
29.		Hex Socket Bolt M3x8 (with Washers)		
30.		Hex Socket Bolt M3x6 (with Plain Washer)		
31.		Hex Socket Set Screw M5x8		
32.		Hex Socket Set Screw M4x4		
33.		Hex Socket Set Screw M3x6		

03-1 TAKE UP LEVER (ZN)

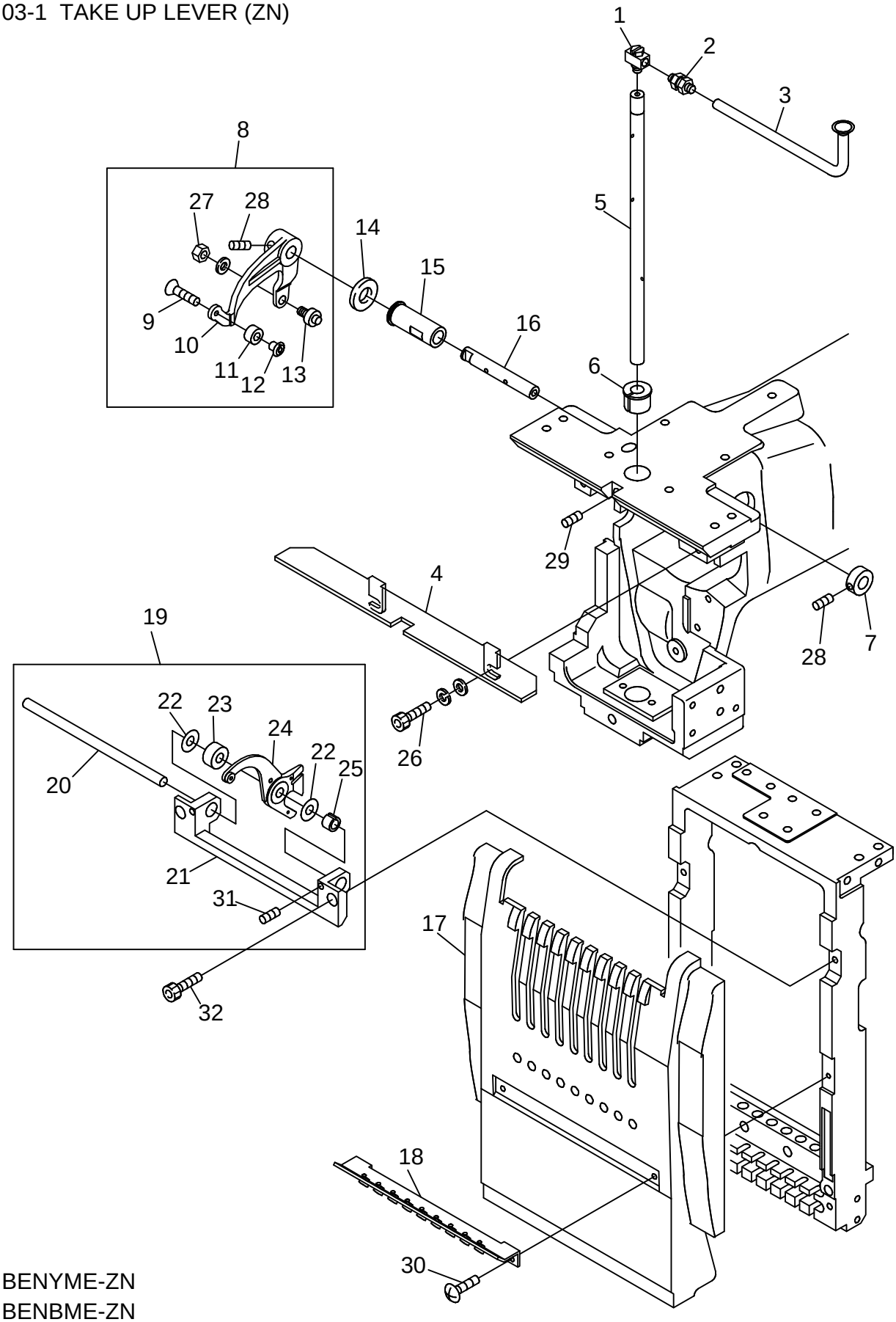

BENYME-ZN
BENBME-ZN

03-1 Take Up Lever (ZN)

(H=Head Qty)

ITEM	LIST NO.	DESCRIPTION	QTY	NOTE
1.	A9075122	Universal Elbow (M-5UL)	Hx1	
2.	A9075123	Universal Nipple (M-5UN)	Hx1	
3.	LA230260	Lubrication Pipe	Hx1	
4.	KX230163	Stocker (ZNA)	Hx1	
5.	LA230170	Slide Shaft	Hx1	
6.	KX230071	Slick Shaft Bushing (Upper)	Hx1	
7.	HB230271	Needle Bar Drive Lever Fixing Collar	Hx1	
8.	KT230052	Take Up Lever Drive Lever Assembly	Hx1	
9.	HB230650	Flush Screw (with Adhesion)	Hx1	
10.	KT230032	Take Up Lever Driving Lever	Hx1	
11.	HT230090	Take Up Lever Drive Roller	Hx1	
12.	HT230100	Take Up Lever Drive Roller Shaft	Hx1	
13.	KF230500	Take Up Lever Roller Assembly	Hx1	
14.	A9012164	Thrust Washer (R-TW0815)	Hx1	
15.	KB230100	Take Up Lever Drive Shaft Metal	Hx1	
16.	KB230110	Take Up Lever Drive Shaft	Hx1	
17.	LA250100	Front Cover (ZN-A)	Hx1	
18.	KX240161	Thread Hanger, ZN (with Ceramic)	Hx1	
19.	KX230200	Take Up Lever Assembly (ZN)	Hx1	
20.	KX230130	Take Up Lever Shaft	Hx1	
21.	KX230110	Take Up Lever Bracket	Hx1	
22.	KX230310	Take Up Lever Shim (T=0.3)	Hx1	
23.	KX230141	Take Up Lever Spacer	Hx8	
24.	KX230152	Take Up Lever (ZN/ZQ)	Hx9	
25.	KX230120	Take Up Lever Collar	HX1	
26.		Hex Socket Bolt M4x10 (with Washers)		
27.		Hex Nut SM7/32 (with Spring Washer)		
28.		Hex Socket Set Screw M5x6 (with Adhesion)		
29.		Hex Socket Set Screw M6x6		
30.		Truss Screw M3x10		
31.		Hex Socket Set Screw M4x8		
32.		Hex Socket Bolt M4x8		

03-2 TAKE UP LEVER (ZQ)

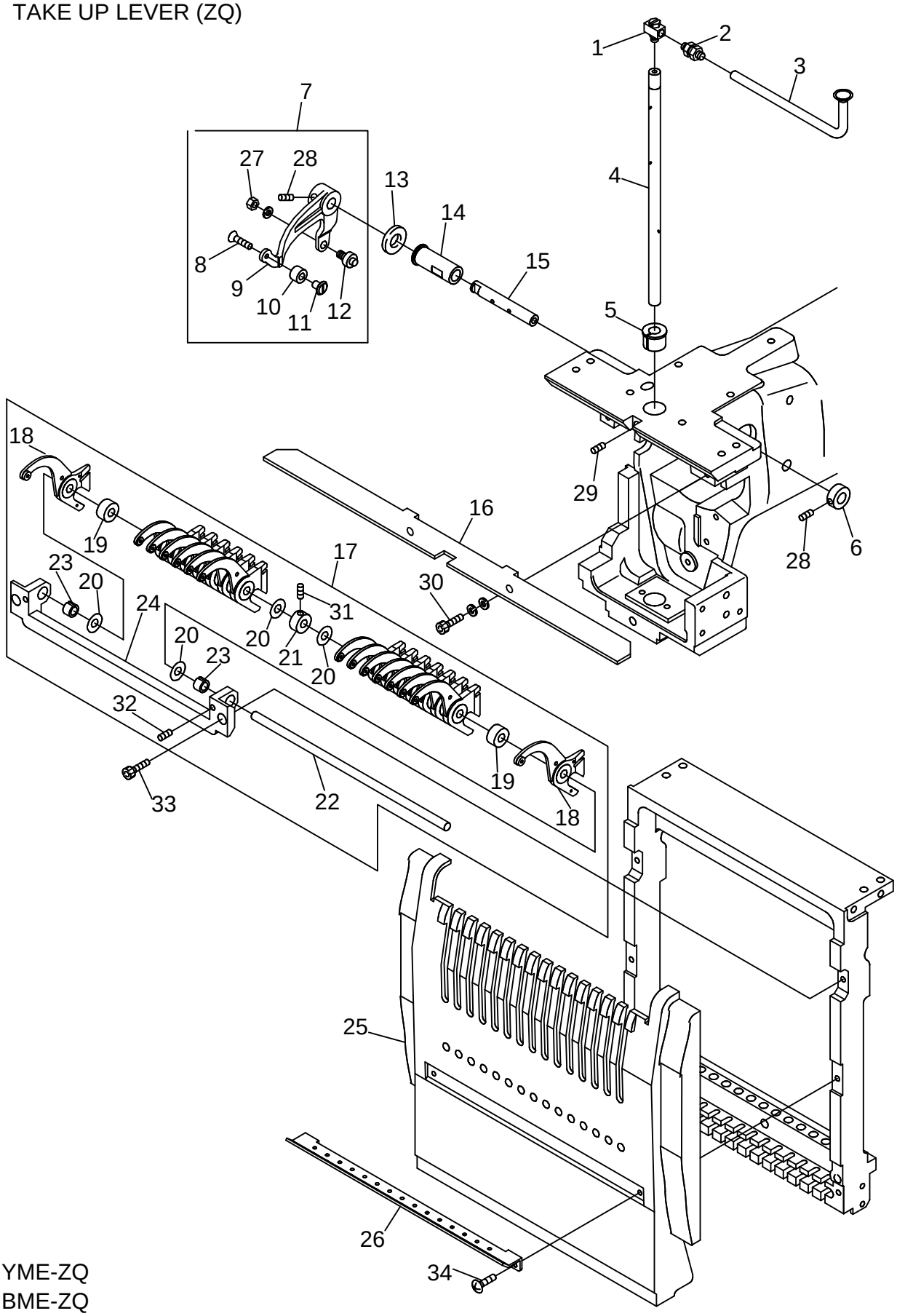

BENYME-ZQ
BENBME-ZQ

03-2 Take Up Lever (ZQ)

(H=Head Qty)

ITEM	LIST NO.	DESCRIPTION	QTY	NOTE
1.	A9075122	Universal Elbow (M-5UL)	Hx1	
2.	A9075123	Universal Nipple (M-5UN)	Hx1	
3.	LA230260	Lubrication Pipe	Hx1	
4.	LA230170	Slide Shaft	Hx1	
5.	KX230071	Slide Shaft Bushing (Upper)	Hx1	
6.	HB230271	Needle Bar Drive Lever Fixing Collar	Hx1	
7.	LA230330	Take Up Lever Drive Lever Assembly	Hx1	
8.	HB230650	Flush Screw (with Adhesion)	Hx1	
9.	KT230032	Take Up Lever Drive Lever	Hx1	
10.	RD230120	Take Up Lever Drive Roller	Hx1	
11.	RD230130	Take Up Lever Drive Roller Shaft	Hx1	
12.	KF230680	Take Up Lever Roller Assembly	Hx1	
13.	A9012164	Thrust Washer (R-TW0815)	Hx1	
14.	KB230100	Take Up Lever Drive Shaft Metal	Hx1	
15.	KB230110	Take Up Lever Drive Shaft	Hx1	
16.	LA230251	Stocker (ZQ)	Hx1	
17.	LA230410	Take Up Lever Assembly (ZQ)	Hx1	
18.	KX230152	Take Up Lever (ZN/ZQ)	Hx15	
19.	KX230141	Take Up Lever Spacer	Hx13	
20.	KX230310	Take Up Lever Shim (T= 0.3)	Hx4	
21.	RD230201	Take Up Lever Spacer Collar	Hx1	
22.	RD230080	Take Up Lever Shaft	Hx1	
23.	KX230120	Take Up Lever Collar	Hx1	
24.	LA230281	Take Up Lever Bracket	Hx1	
25.	LA250050	Front Cover (ZQ)	Hx1	
26.	RD240271	Thread Hanger, ZQ (with Ceramic)	Hx1	
27.		Hex Nut SM7/32 (with Spring Washer)		
28.		Hex Socket Set Screw M5x6 (with Adhesion)		
29.		Hex Socket Set Screw M6x6		
30.		Hex Socket Bolt M4x10 (with Washers)		
31.		Hex Socket Set Screw M4x4		
32.		Hex Socket Set Screw M4x8		
33.		Hex Socket Bolt M4x8		
34.		Phillips Truss Screw M3x8		

04A-1 NEEDLE BAR A (ZN)

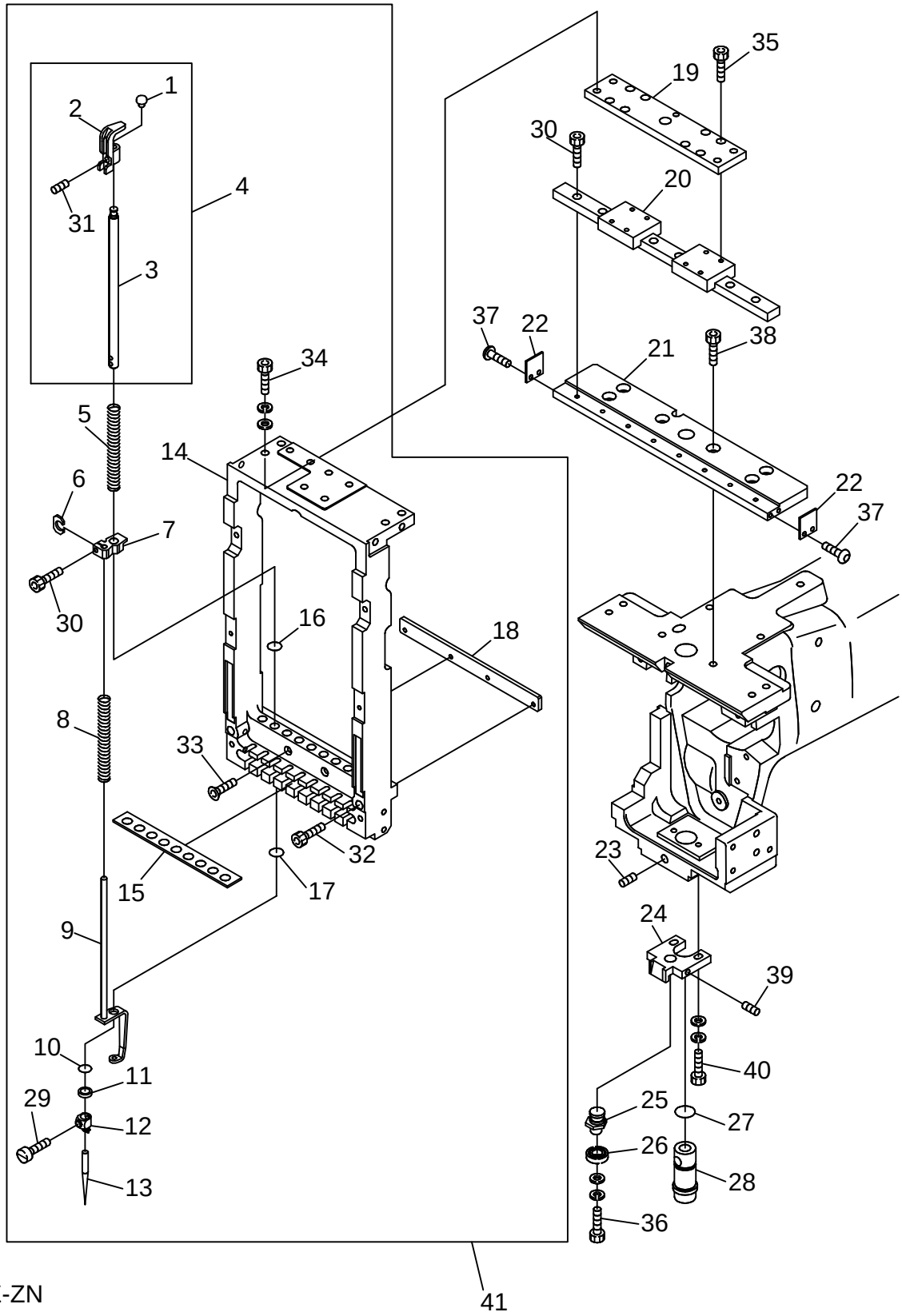

BENYME-ZN
BENBME-ZN

04A-1 Needle Bar A (ZN)

(H=Head Qty)

ITEM	LIST NO.	DESCRIPTION	QTY	NOTE
1.	HT230130	Needle Bar Cap	Hx9	
2.	HT230151	Needle Bar Guide	Hx9	
3.	HT230041	Needle Bar	Hx9	
4.	HT230810	Needle Bar Assembly	Hx9	
5.	HT230251	Needle Bar Spring	Hx9	
6.	HT230263	Set Clamp Washer	Hx9	
7.	HT230330	Presser Foot Set Clamp	Hx9	
8.	KX230251	Needle Bar Spring (Lower)	Hx9	
9.	HT230143	Presser Foot (YN/ZN)	Hx9	
10.	KF230910	O-Ring (S)	Hx9	
11.	MF230000	Needle Clamp Spacer (ZN/ZQ)	Hx9	
12.	HT230670	Needle Clamp (with Hook)	Hx9	
13.	FN070011SNY	Needle (DBXK5-NY11S)	Hx9	
14.	KX230283	Slide Block (ZNA)	Hx1	
15.	KX230180	Needle Bar Felt	Hx1	
16.	A9014055	O-Ring (L) (1AS-7)	Hx9	
17.	KF230920	O-Ring (L)	Hx9	
18.	KX230040	Bearing Plate	Hx1	
19.	KX230010	LM Base	Hx1	
20.	KX230060	LM Guide	Hx1	
21.	KX230023	Base Plate	Hx1	
22.	KX230191	LM Stopper	Hx2	
23.	A9012053	Hex Socket Set Screw M6x8	Hx2	
24.	LA230140	Bearing Guide	Hx1	
25.	KX230050	Bearing Pin	Hx1	
26.	A9010065	Ball Bearing (686ZZ)	Hx1	
27.	A9019037	O-Ring (Lower Bushing, S12.5)	Hx1	
28.	LA230080	Slide Shaft Bushing (Lower)	Hx1	
29.	KF230240	Needle Clamp Screw (SM9/64-40)	Hx9	
30.		Hex. Socket Bolt M3x8		
31.		Hex. Socket Set Screw M4x4		
32.		Hex Socket Bolt M3x25		
33.		Hex Socket Flush Screw M3x25		
34.		Hex Socket Bolt M5x16 (with Washers)		
35.		Hex Socket Bolt M3x6		
36.		Hex Socket Bolt M4x6 (with Washers)		
37.		Hex Socket Bolt M3x6		
38.		Hex Socket Bolt M5x12		
39.		Hex Socket Set Screw M4x12		
40.		Hex Socket Bolt M4x15 (with Washers)		
41.	LA230321	Slide Block Assembly (ZNA)	Hx1	

04A-2 NEEDLE BAR A (ZQ)

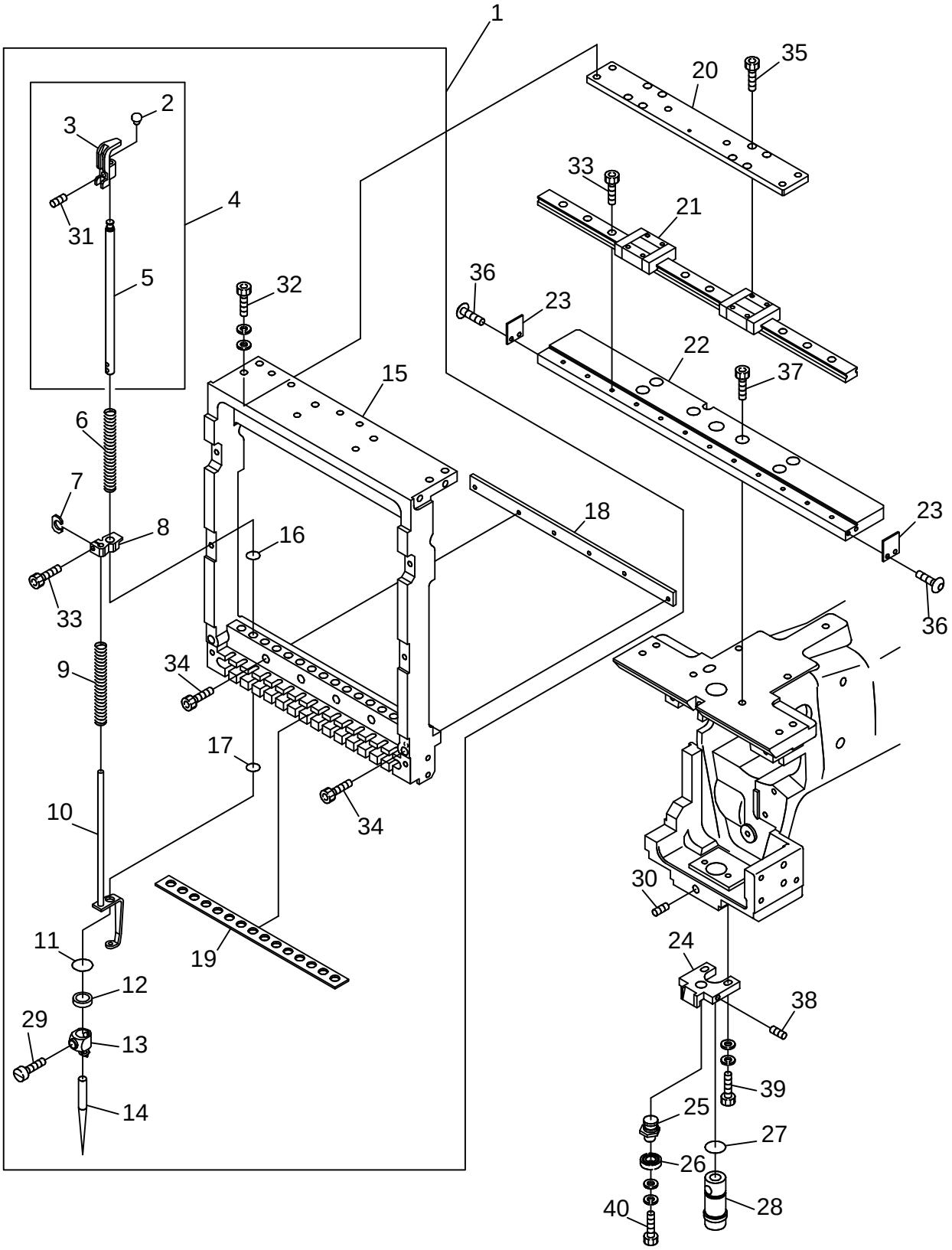

BENYME-ZQ
BENBME-ZQ

04A-2 Needle Bar A (ZQ)

(H=Head Qty)

ITEM	LIST NO.	DESCRIPTION	QTY	NOTE
1.	LA230301	Slide Block Assembly (ZQ)	Hx1	
2.	HT230130	Needle Bar Cap	Hx15	
3.	HT230151	Needle Bar Guide	Hx15	
4.	HT230190	Needle Bar Assembly	Hx15	
5.	HT230041	Needle Bar	Hx15	
6.	HT230251	Needle Bar Spring (Upper)	Hx15	
7.	HT230261	Set Clamp Washer	Hx15	
8.	HT230330	Presser Foot Set Clamp	Hx15	
9.	KX230250	Needle Bar Spring (Lower)	Hx15	
10.	HT230143	Presser Foot (YN/ZN)	Hx15	
11.	KF230910	O-Ring (S)	Hx15	
12.	MF230000	Needle Clamp Spacer (ZN/ZQ)	Hx15	
13.	HT230670	Needle Clamp (with Hook)	Hx15	
14.	FN070011SNY	Needle (DBXK5-NY11S)	Hx15	
15.	LA230231	Slide Block (ZQ)	Hx1	
16.	A9014055	O-Ring (L) (1AS-7)	Hx15	
17.	KF230920	O-Ring (L)	Hx15	
18.	RD230060	Bearing Plate	Hx1	
19.	RD230070	Needle Bar Felt	Hx1	
20.	LA230240	LM Base	Hx1	
21.	RD230020	LM Guide	Hx1	
22.	LA230221	Base Plate	Hx1	
23.	KX230191	LM Stopper	Hx2	
24.	LA230140	Bearing Guide	Hx1	
25.	KX230050	Bearing Pin	Hx1	
26.	A9010065	Ball Bearing (686ZZ)	Hx1	
27.	A9019037	O-Ring (Lower Bushing, S12.5)	Hx1	
28.	LA230080	Slide Shaft Bushing (Lower)	Hx1	
29.	KF230240	Needle Clamp Screw (SM9/64-40)	Hx15	
30.	A9012053	Hex Socket Set Screw M6x8	Hx2	
31.		Hex Socket Set Screw M4x4		
32.		Hex Socket Bolt M5x16 (with Washers)		
33.		Hex Socket Bolt M3x8		
34.		Hex Socket Bolt M3x25		
35.		Hex Socket Bolt M3x6		
36.		Hex Socket Button Bolt M3x6		
37.		Hex Socket Bolt M5x12		
38.		Hex Socket Set Screw M4x12		
39.		Hex Socket Bolt M4x15 (with Washers)		
40.		Hex Socket Bolt M4x6 (with Washers)		

04B NEEDLE BAR B

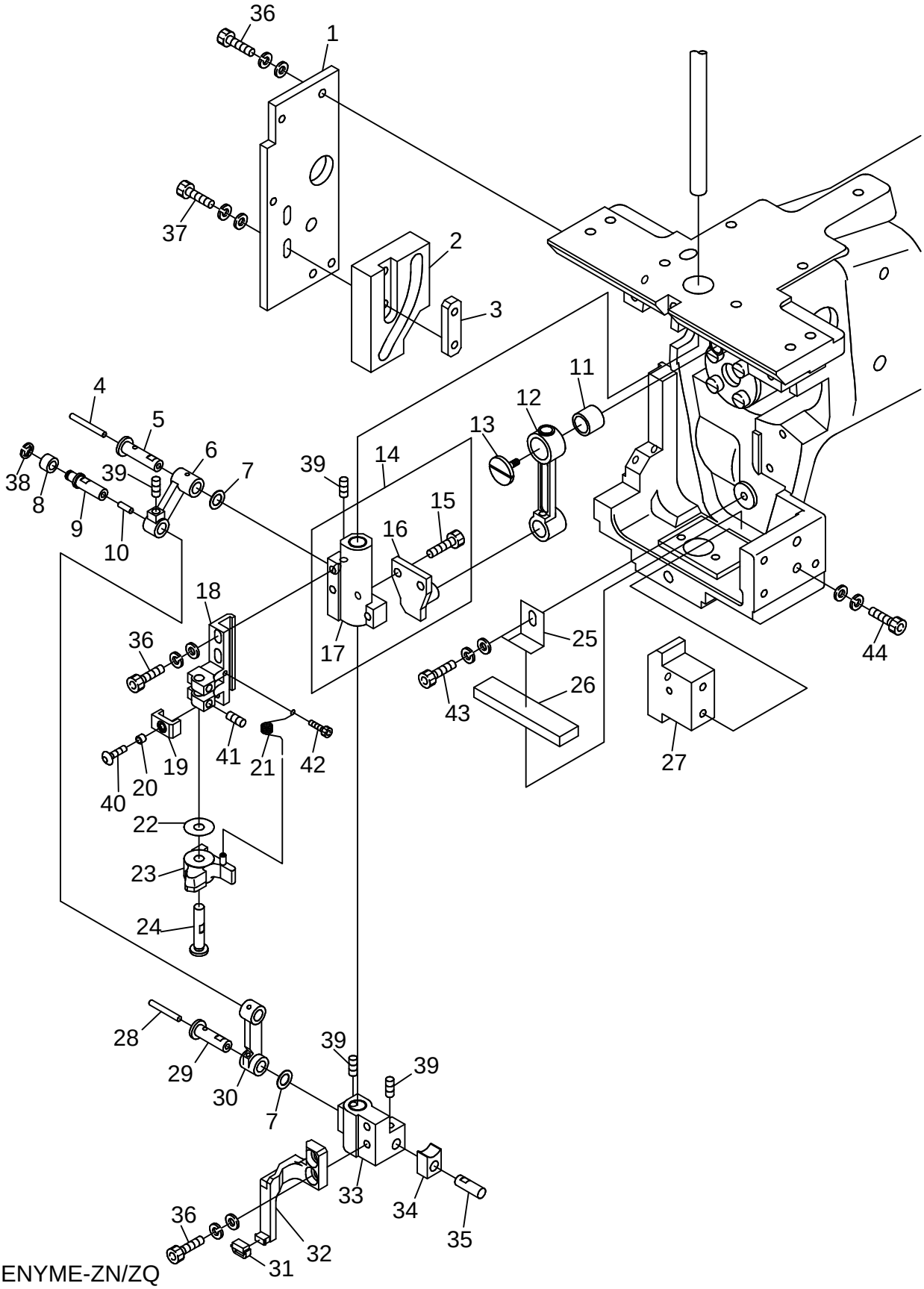

BENYME-ZN/ZQ
BENBME-ZN/ZQ

04B Needle Bar B

(H=Head Qty)

ITEM	LIST NO.	DESCRIPTION	QTY	NOTE
1.	LA230100	Presser Foot Cam Plate	Hx1	
2.	LA230150	Presser Foot Cam	Hx1	
3.	HT230380	Cam Tap Plate	Hx1	
4.	LA230290	Oil Core (23mm)	Hx1	
5.	LA230110	Link Pin (Upper)	Hx1	
6.	LA230040	Link (Upper)	Hx1	
7.	HT230730	Shim Ring (10.0 Dia., T=0.3)	Hx2	
8.	KF230530	Roller Joint Pin	Hx1	
9.	LA230130	Link Roller Joint Pin	Hx1	
10.	HT230760	Oil Core (8mm)	Hx1	
11.	A9011115	Needle Bearing (K9x12x10T2)	Hx1	
12.	LA230060	Crank Rod	Hx1	
13.	KB230070	90° Crank (Counterclockwise Screw)	Hx1	
14.	LA230030	Driver Slide Assembly	Hx1	
15.	A9019036	Hex Socket Bolt M4x10	Hx2	
16.	LA230020	Driver Slide Pin	Hx1	
17.	LA230010	Driver Slide	Hx1	
18.	LB230070	Needle Bar Driver Fixing Base (ZN/ZQA)	Hx1	
19.	HT230520	Needle Bar Driver Stopper	Hx1	
20.	A9012368	Spacer (Roll Bushing)	Hx1	
21.	HT230560	Needle Bar Driver Return Spring	Hx1	
22.	A9012367	Shim Ring (15.0 Dia., T=0.15)	Hx1	
23.	HT230531	Needle Bar Driver	Hx1	
24.	HT230280	Needle Bar Driver Pin	Hx1	
25.	LA230200	Felt Plate	Hx1	
26.	LA230210	Felt (Head Oil)	Hx1	
27.	LA230160	Guide Box	Hx1	
28.	HT230770	Oil Core (20mm)	Hx1	
29.	LA230120	Link Pin (Lower)	Hx1	
30.	LA230050	Link (Lower)	Hx1	
31.	HT230340	Presser Foot Support Rubber	Hx1	
32.	HT230370	Presser Foot Support	Hx1	
33.	LA230070	Presser Foot Slide	Hx1	
34.	HP231370	Square Ball	Hx1	
35.	LA230090	Square Ball Pin	Hx1	
36.		Hex Socket Bolt M4x12		
37.		Hex Socket Bolt M4x20		
38.		E-ring (3.0 Dia.)		
39.		Hex Socket Set Screw M4x6 (with Nylon)		
40.		Hex Socket Button Bolt M3x6		
41.		Hex Socket Set Screw M4x4 (with Nylon)		
42.		Hex Socket Bolt M2.5x6		
43.		Hex Socket Bolt M4x8		
44.		Hex Socket Bolt M4x16		

04C NEEDLE BAR C

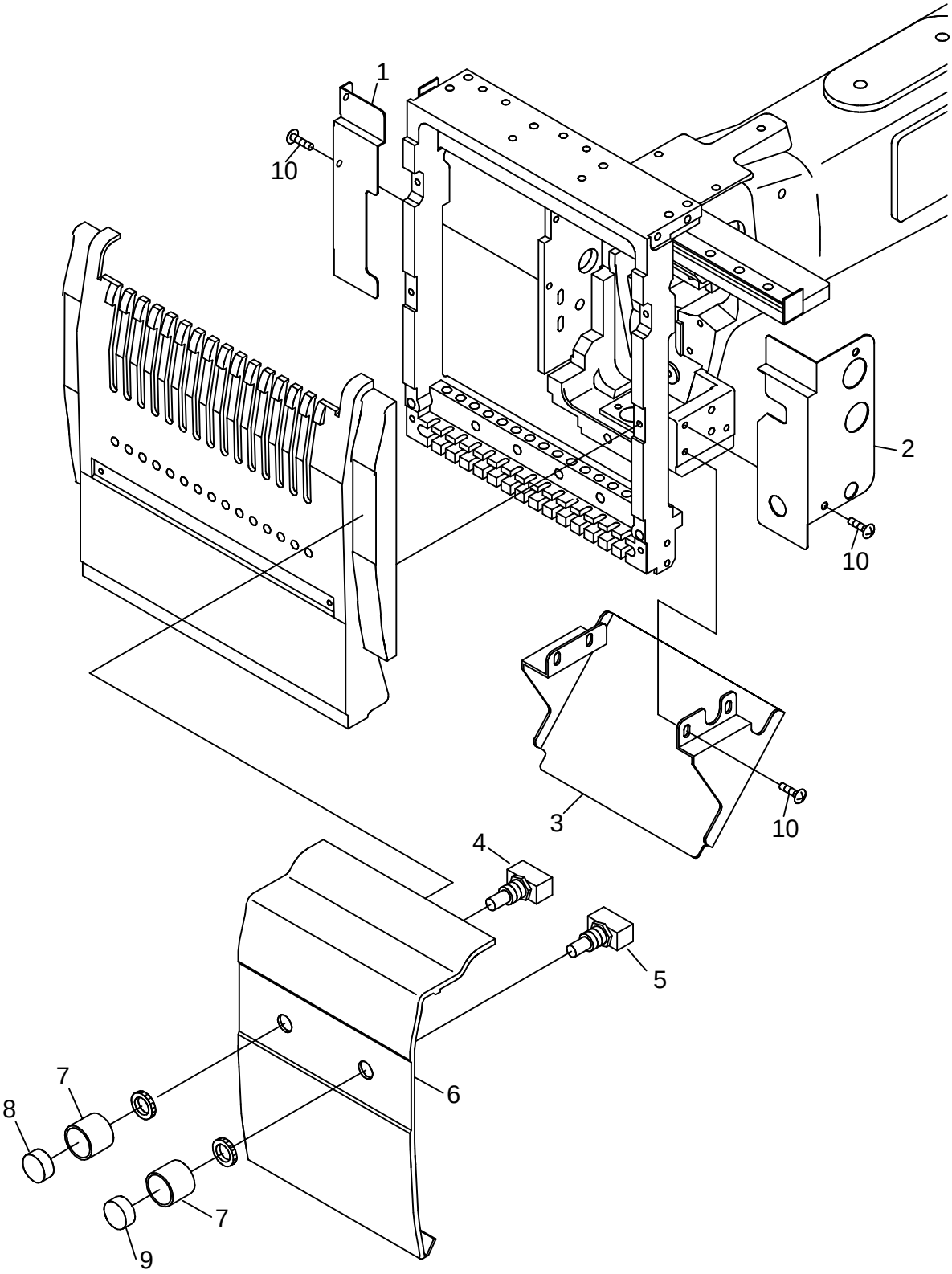

BENYME-ZN/ZQ
BENBME-ZN/ZQ

04C Needle Bar C

(H=Head Qty)

ITEM	LIST NO.	DESCRIPTION	QTY	NOTE
1.	LA250020	ZQ/ZNA Side Cover (L)	Hx1	
2.	LA250010	ZQ/ZNA Side Cover (R)	Hx1	
3.	LA270110	ZQ/ZNA Cap Cover	Hx1	
4.	A9052080	Push Button Switch (Green)		
5.	A9052081	Push Button Switch (Red)		
6.	LA250080	ZQA Cover between Heads (with Hole)		
	LA250090	ZQA Cover between Heads (w/o Hole)		
	LA250130	ZNA Cover between Heads (with Hole)		
	LA250140	ZNA Cover between Heads (w/o Hole)		
7.	A110004	Switch Bezel	Hx2	
8.	B250011	Green Button (AT-414F)		
9.	B250010	Red Button (AT-414C)		
10.		Truss Screw M4x6		

05 JUMP

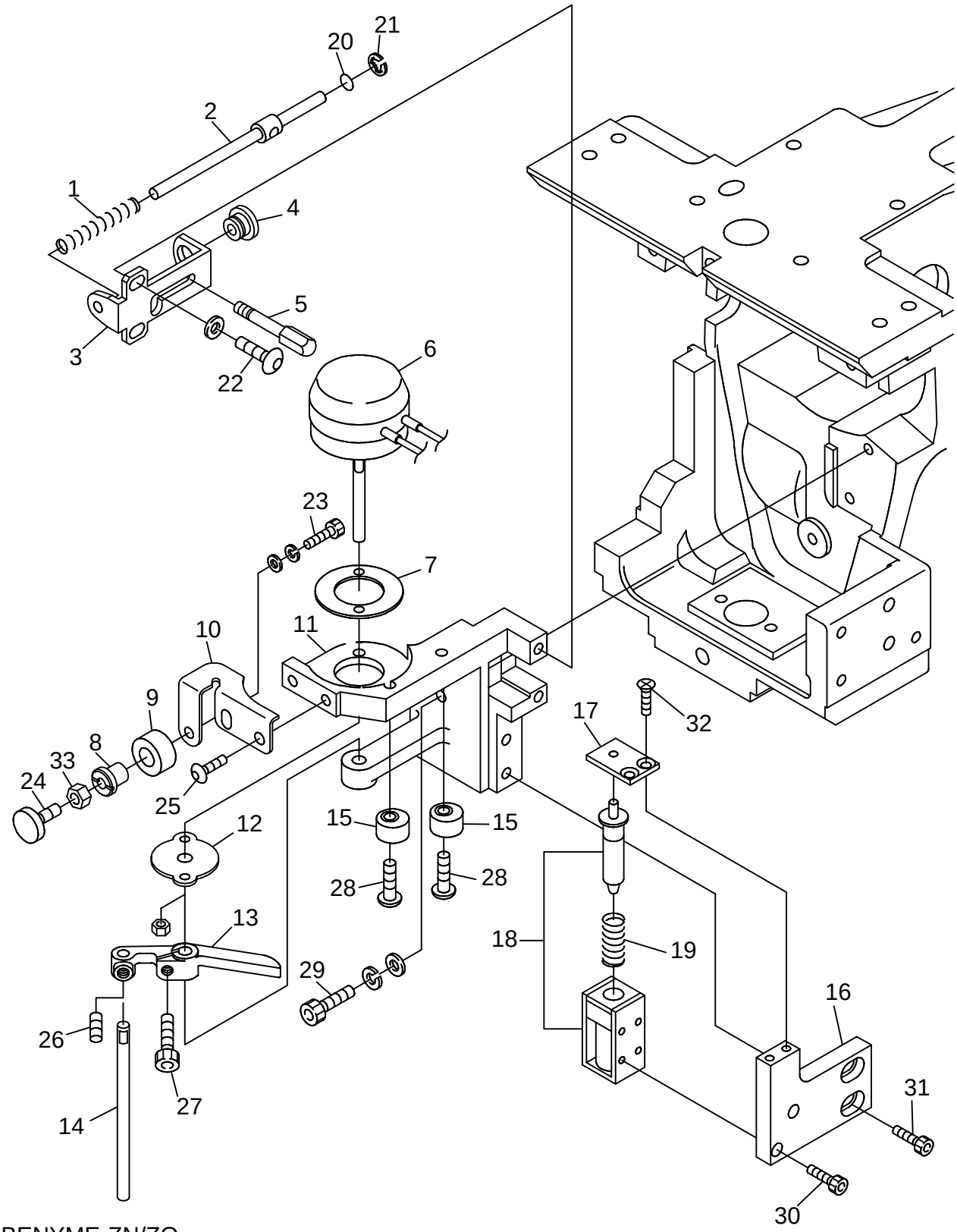

BENYME-ZN/ZQ
BENBME-ZN/ZQ

05 Jump

(H=Head Qty)

ITEM	LIST NO.	DESCRIPTION	QTY	NOTE
1.	HB240110	Cancel Return Spring	Hx1	
2.	KX240051	Cancel Rod	Hx1	
3.	HB240040	Cancel Bracket	Hx1	
4.	HB240090	Cancel Rod Guide	Hx1	
5.	HT240580	Manual Cancel Pin	Hx1	
6.	A9056027	Rotary Solenoid, Jump (M960372R) (ETL)	Hx1	
7.	HB230560	Sheet for Rotary Solenoid	Hx1	
8.	HT230620	Needle Bar Stopper Fixing Pin	Hx1	
9.	HT230220	Needle Bar Stopper	Hx1	
10.	KX230100	Needle Bar Stopper Fixing Bracket	Hx1	
11.	LA240020	Jump Solenoid Fixing Bracket	Hx1	
12.	HB230580	Solenoid Noise Prevention Cover	Hx1	
13.	HB240020	Jump Solenoid Lever	Hx1	
14.	HB240030	Jump Solenoid Lever Pin	Hx1	
15.	HB240041	Jump Eccentric	Hx2	
16.	LA240010	Cancel Solenoid Fixing Plate	Hx1	
17.	RD230220	Plunger Guide	Hx1	
18.	HB560210	Cancel Solenoid Assembly (TDS-K07A) (ETL)	Hx1	
19.	HB560060	Cancel Solenoid Spring	Hx1	
20.	A9014051	O-Ring (P-5)		
21.	A9012051	E-Ring (6.0 Dia.)		
22.		Hex Socket Button Bolt M4x10		
23.		Hex Socket Bolt M4x8 (with Washers)		
24.	LA230350	Needle Bar Indication Bolt	Hx1	
25.		Hex Socket Button Bolt M4x5		
26.		Hex Socket Set Screw M4x4 (with Adhesion)		
27.		Hex Socket Bolt M4x8		
28.		Hex Socket Button Bolt M4x12		
29.		Hex Socket Bolt M4x12		
30.		Hex Socket Bolt M2.6x5		
31.		Hex Socket Bolt M4x10		
32.		Flush Screw M3x8		
33.		Hex Nut M4		

06A-1-1 THREAD GUIDE A (STANDARD)(ZN)

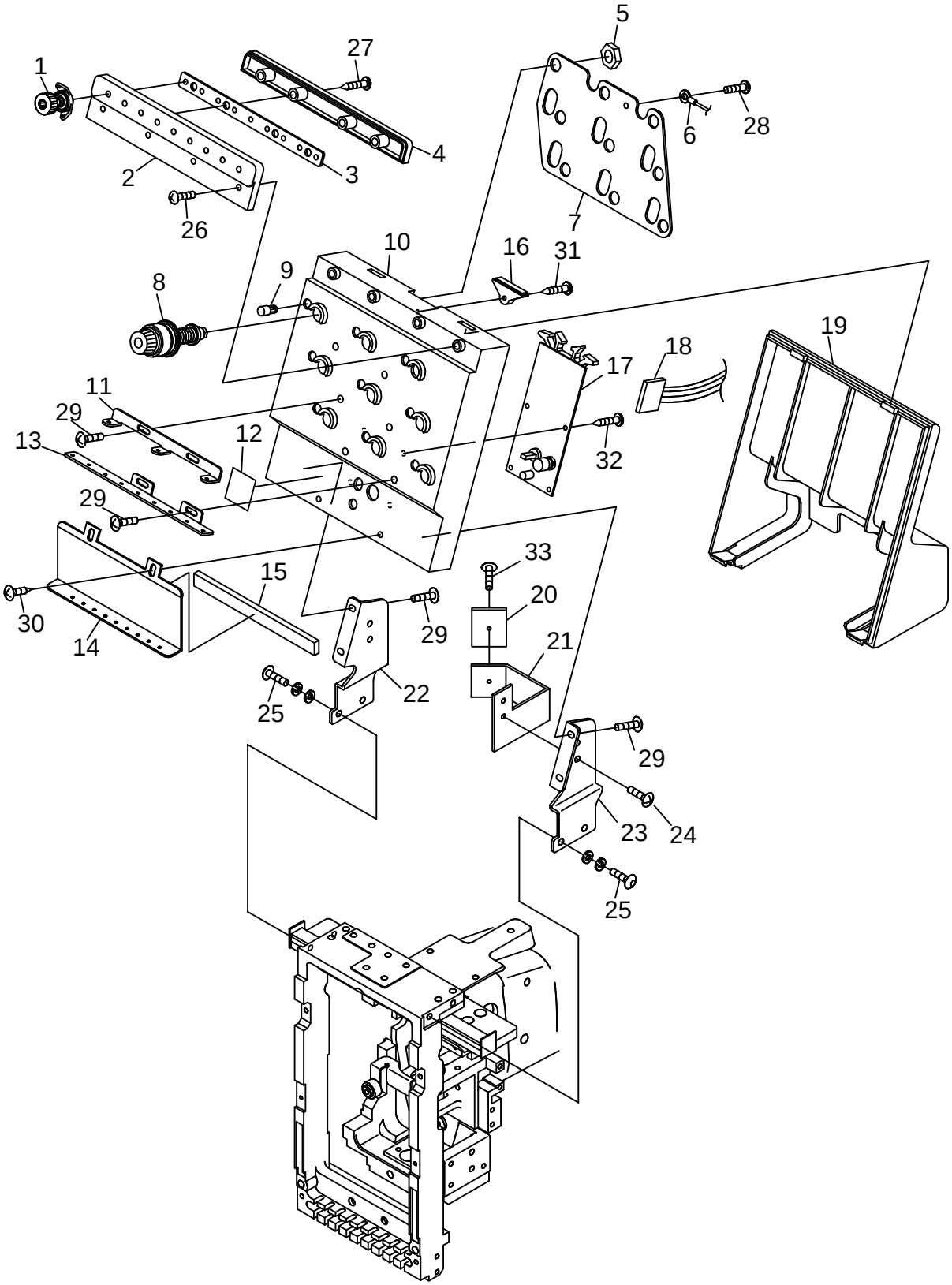

BENYME-ZN
BENBME-ZN

06A-1-1 Thread Guide A (Standard) (ZN)

(H=Head Qty)

ITEM	LIST NO.	DESCRIPTION	QTY	NOTE
1.	HT240331	First Tension Thread Guide	Hx9-9	
2.	HT240211	First Thread Guide Fixing Case	H-1	
3.	HT240230	First Thread Guide Fixing Base	H-1	
4.	HT240220	First Thread Guide Fixing Cover	H-1	
5.	HT240180	SM-Nut	Hx9-9	
6.	KX240150	Tension Ground Cable (ZN)	H-1	
7.	HT240160	Tension Ground Plate	H-1	
8.	HT240525	Dial Thread Tension Unit Assembly	Hx9-9	
9.	HT240170	Upper Thread Detection Contact Post	Hx9-9	
10.	HT240120	Tension Base Case	H-1	
11.	HT240062	First Thread Guide	H-1	
12.		Number Label	H-1	
13.	HT240391	Thread Guide Plate	H-1	
14.	KX240032	Second Thread Guide Plate	H-1	
15.	LA240050	Sponge Rubber (ZN-A)	H-1	
16.	HT240240	Blind Cap	H-1	
17.	EBY01670	4640 Head Switch Board (ZN/ZQ)	H-1	
18.	EBY01624	H1840 16-Pin Flat Ribbon Cable	H-1	
19.	HT240130	Tension Base Cover	H-1	
20.	A9068032	Clamp (FCW-26)	H-1	
21.	KX240060	Wiring Holder	H-1	
22.	KX240010	Tension Base Bracket, ZN (L)	H-1	
23.	KX240000	Tension Base Bracket, ZN (R)	H-1	
24.		Truss Screw M4x6		
25.		Hex Socket Button Bolt M5x12 (with Washers)		
26.		Pan Screw M3x6		
27.		Tapping Screw ϕ3x12		
28.		Pan Screw M3x6		
29.		Truss Screw M4x10		
30.		Tapping Truss Screw ϕ4x10		
31.		Tapping Screw ϕ3x12		
32.		Pan Head Tapping Screw ϕ3x8		
33.		Pan Screw M3x5		

06A-1-2 THREAD GUIDE A (STANDARD)(ZN)(FIRST HEAD)

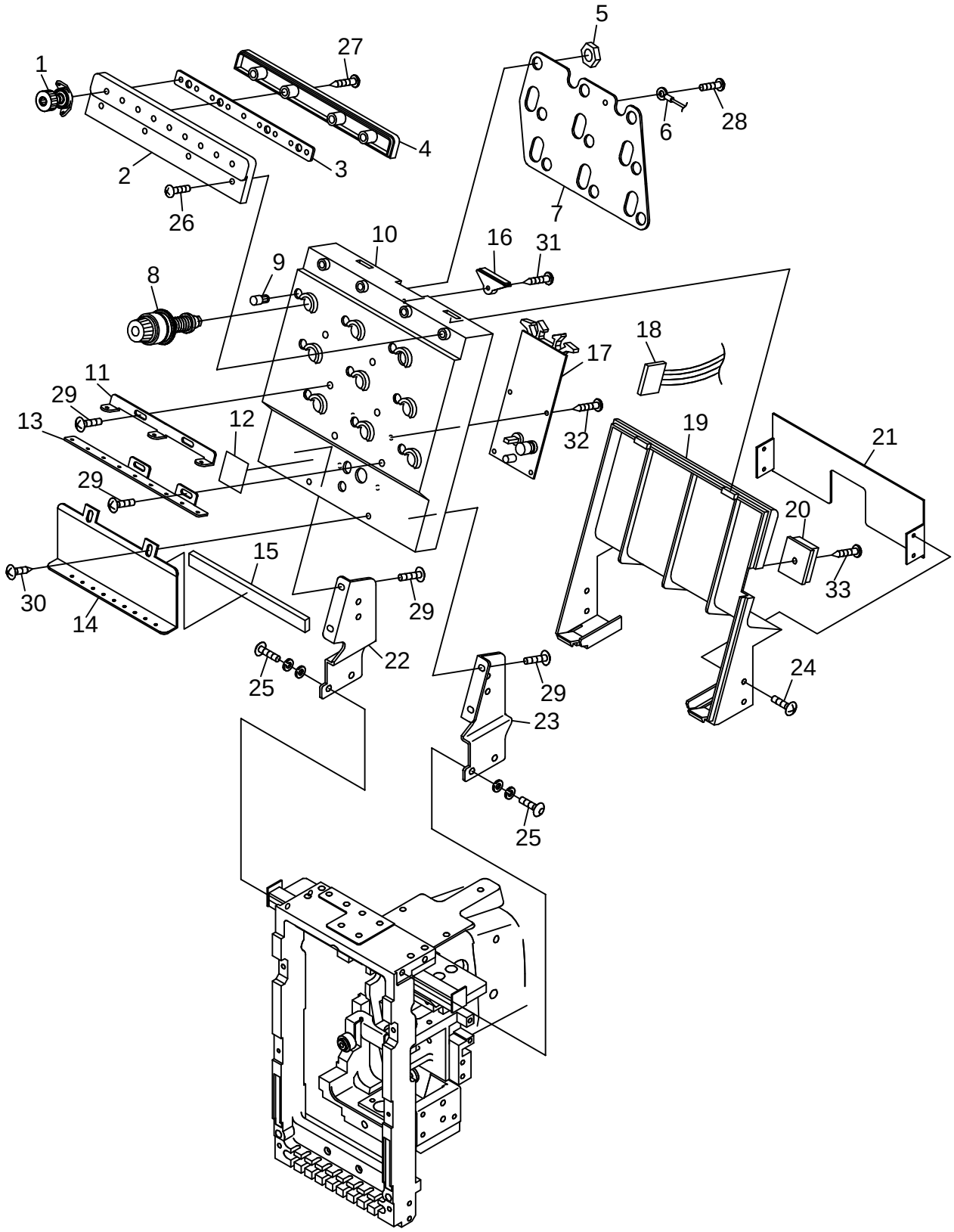

BENYME-ZN
BENBME-ZN

06A-1-2 Thread Guide A (Standard) (ZN) (First Head)

ITEM	LIST NO.	DESCRIPTION	QTY	NOTE
1.	HT240331	First Tension Thread Guide	9	
2.	HT240211	First Thread Guide Fixing Case	1	
3.	HT240230	First Thread Guide Fixing Base	1	
4.	HT240220	First Thread Guide Fixing Cover	1	
5.	HT240180	SM-Nut	9	
6.	KX240150	Tension Ground Cable (ZN)	1	
7.	HT240160	Tension Ground Plate	1	
8.	HT240525	Dial Thread Tension Unit Assembly	9	
9.	HT240170	Upper Thread Detection Contact Post	9	
10.	HT240120	Tension Base Case	1	
11.	HT240062	First Thread Guide	1	
12.		Number Label	1	
13.	HT240391	Thread Guide Plate	1	
14.	KX240032	Second Thread Guide Plate	1	
15.	LA240050	Sponge Rubber (ZN-A)	1	
16.	HT240240	Blind Cap	1	
17.	EBY01670	4640 Head Switch Board (ZN/ZQ)	1	
18.	EBY01625	H1842 16-Pin Head Ribbon Cable (ZN/ZQ)	1	First Head
19.	KX330320	Tension Base Cover	1	
20.	A9068032	Clamp (FCW-26)	1	
21.	KX330330	Tension Base Cover A	1	
22.	KX240010	Tension Base Bracket, ZN (L)	1	
23.	KX240000	Tension Base Bracket, ZN (R)	1	
24.		Truss Screw M3x8		
25.		Hex Socket Button Bolt M5x12 (with Washers)		
26.		Pan Screw M3x6		
27.		Tapping Screw ϕ3x12		
28.		Pan Screw M3x6		
29.		Truss Screw M4x10		
30.		Tapping Truss Screw ϕ4x10		
31.		Tapping Screw ϕ3x12		
32.		Pan Head Tapping Screw ϕ3x8		
33.		Pan Head Tapping Screw ϕ3x5		

06A-2 THREAD GUIDE A (STANDARD)(ZQ)

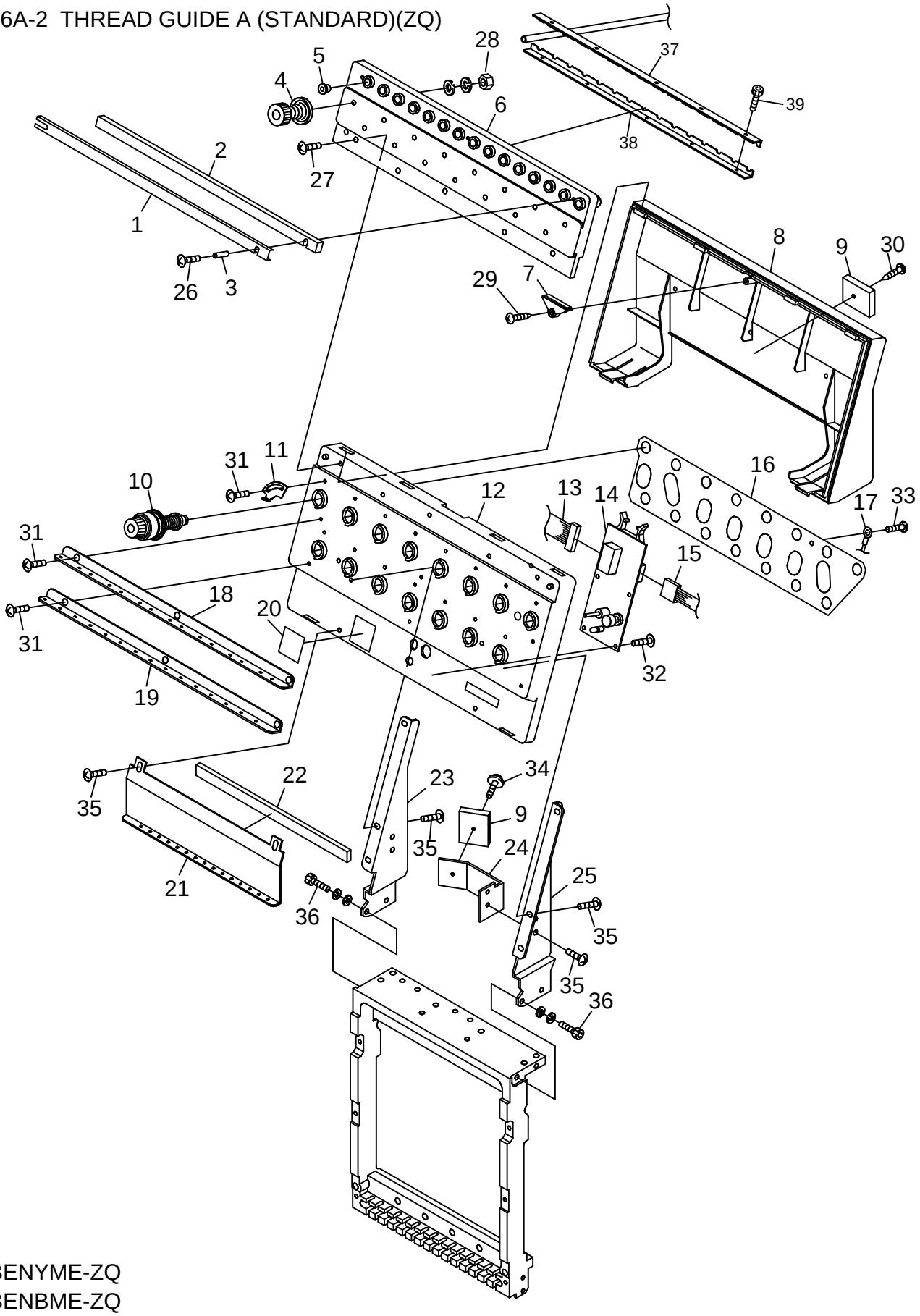

BENYME-ZQ
BENBME-ZQ

06A-2 Thread Guide A (Standard) (ZQ)

(H=Head Qty)

ITEM	LIST NO.	DESCRIPTION	QTY	NOTE
1.	RD240291	Felt Frame	Hx1	
2.	RD240301	Felt	Hx1	
3.	A9012412	Spacer (3.0 Dia.x17L)	Hx2	
4.	RD240320	First Thread Tension Unit Assembly (ZQ-A)	Hx15	
5.	HT240480	Thread Guide Eyelet (White)	Hx15	
6.	RD240280	Thread Tension Base	Hx1	
7.	HT240240	Blind Cap	Hx1	
8.	RD240030	Tension Base Cover (ZQ-A)	Hx1	
9.	A9068032	Clamp (FCW-26)	Hx2	
10.	RD240152	Dial Thread Tension Unit Assembly (ZQ)	Hx15	
11.	RD240111	Thread Spring Adjusting Plate	Hx15	
12.	RD240021	Tension Base Case	Hx1	
13.	EBY01690	H1899 Cable	Hx1	
14.	EBY01670	4640 Head Switch Board (ZN/ZQ)	Hx1	
15.	EBY01700	H1900 Additional Cable	Hx1	
16.	RD240121	Tension Ground Plate	Hx1	
17.	RD240220	Tension Ground Cable	Hx1	
18.	RD240330	First Thread Guide Plate (ZQ-A)	Hx1	
19.	RD240340	Second Thread Guide Plate(ZQ-A)	Hx1	
20.		Number Label	Hx1	
21.	LA240030	Second Thread Guide	Hx1	
22.	LA240040	Sponge Rubber	Hx1	
23.	MG240010	Tension Base Bracket, ZQ (L)	Hx1	
24.	RD240090	Wiring Holder	Hx1	
25.	MG240000	Tension Base Bracket, ZQ (R)	Hx1	
26.		Truss Screw M3x25		
27.		Truss Screw M4x10		
28.		Hex Nut SM11/64		
29.		Tapping Screw ϕ3x12		
30.		Tapping Pan Screw ϕ3x25		
31.		Truss Screw M3x5		
32.		Truss Screw M3x6		
33.		Pan Screw M3x6		
34.		Pan Screw with Flange M3x8		
35.		Truss Screw M4x6		
36.		Hex Socket Bolt M5x10 (with Washers)		
37.	RD240430	Tube Holder (Upper)		
38.	RD240440	Tube Holder (Lower)		
39.		Hex Socket Bolt M3x16		

06B-1 THREAD GUIDE B (UTSM) (ZN)

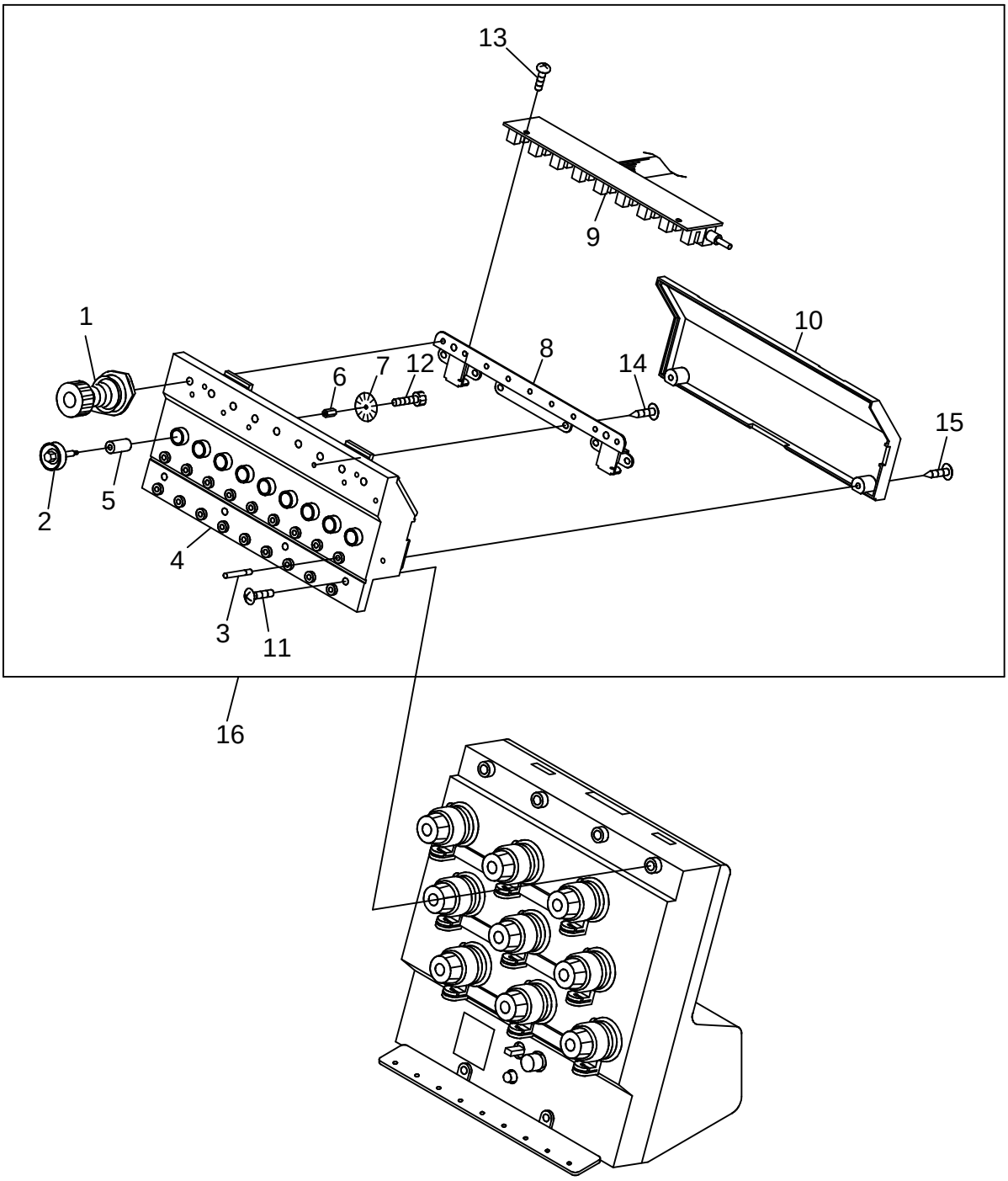

BENYME-ZN
BENBME-ZN

06B-1 Thread Guide B (UTSM) (ZN)

(H=Head Qty)

ITEM	LIST NO.	DESCRIPTION	QTY	NOTE
1.	HT240340	Second Thread Tension Unit Assy., UTSM (ZN)	Hx9	
2.	HT240290	Tension Wheel	Hx9	
3.	HT240300	Thread Guide Pin	Hx18	
4.	HT240250	UTSM Case (YN/ZN)	Hx1	
5.	HT240310	Tension Wheel Bearing	Hx9	
6.	KN540510	Tension Wheel Nut	Hx9	
7.	HT240100	UTSM Disk (YN)	Hx9	
8.	HT240280	UTSM Board Bracket (YN)	Hx1	
9.	EBY01110	4690 UTSM Board	Hx1	
10.	HT240270	UTSM Cover (YN)	Hx1	
11.		Truss Screw M4x10		
12.		Hex Socket Bolt M2x3		
13.		Pan Screw M3x6		
14.		Tapping Pan Screw ϕ3x8		
15.		Tapping Pan Screw ϕ3x12		
16.	HT240410	UTSM Complete Assembly (YN/ZN/ZNA)		

06B-2 THREAD GUIDE B (UTSM) (ZQ)

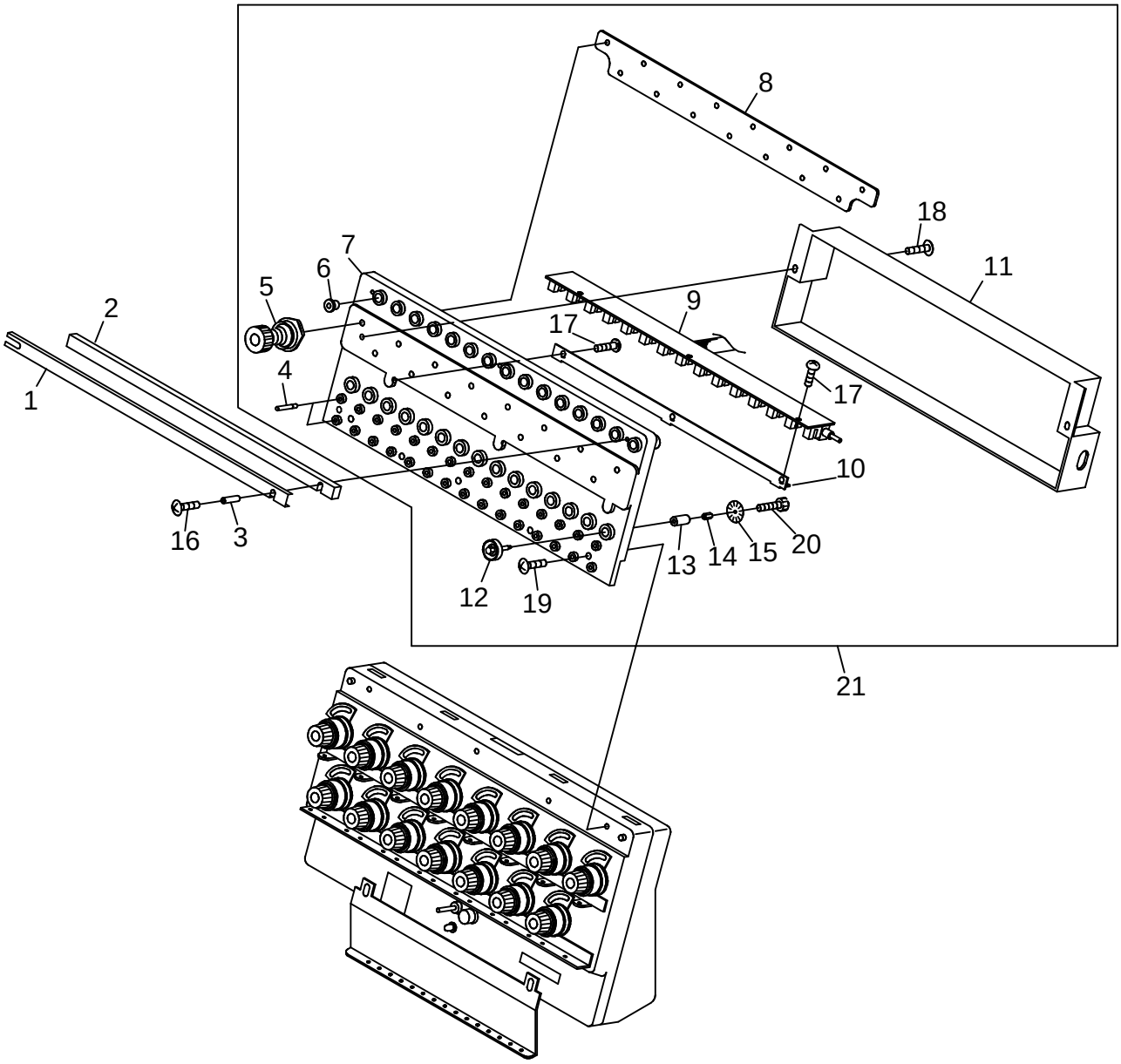

BENYME-ZQ
BENBME-ZQ

06B-2 Thread Guide B (UTSM) (ZQ)

(H=Head Qty)

ITEM	LIST NO.	DESCRIPTION	QTY	NOTE
1.	RD240291	Felt Frame	Hx1	
2.	RD240301	Felt	Hx1	
3.	A9012412	Spacer (3.0 Dia.x17L)	Hx2	
4.	HT240300	Thread Guide Pin	Hx30	
5.	RD540031	First Thread Tension Unit Assembly (ZQ)	Hx15	
6.	HT240480	Thread Guide Eyelet (White)	Hx15	
7.	RD240420	UTSM Case (ZQ)	Hx1	
8.	RD540020	UTSM Case Fixing Plate	Hx1	
9.	EBY01720	4680 UTSM Board ZQ (with Cable)	Hx1	
10.	RD540060	UTSM Board Bracket	Hx1	
11.	RD540050	UTSM Board Cover (ZQ)	Hx1	
12.	HT240290	Tension Wheel	Hx15	
13.	HT240310	Tension Wheel Bearing	Hx15	
14.	KN540510	Tension Wheel Nut	Hx15	
15.	HT240100	UTSM Disk (YN/ZN/ZQ)	Hx15	
16.		Truss Screw M3x25		
17.		Pan Screw M3x6		
18.		Truss Screw M3x6		
19.		Truss Screw M4x10		
20.		Hex Socket Bolt M2x3		
21.	RD540090	UTSM Assembly (ZQ)		

07A-1 COLOR CHANGE A (ZN)

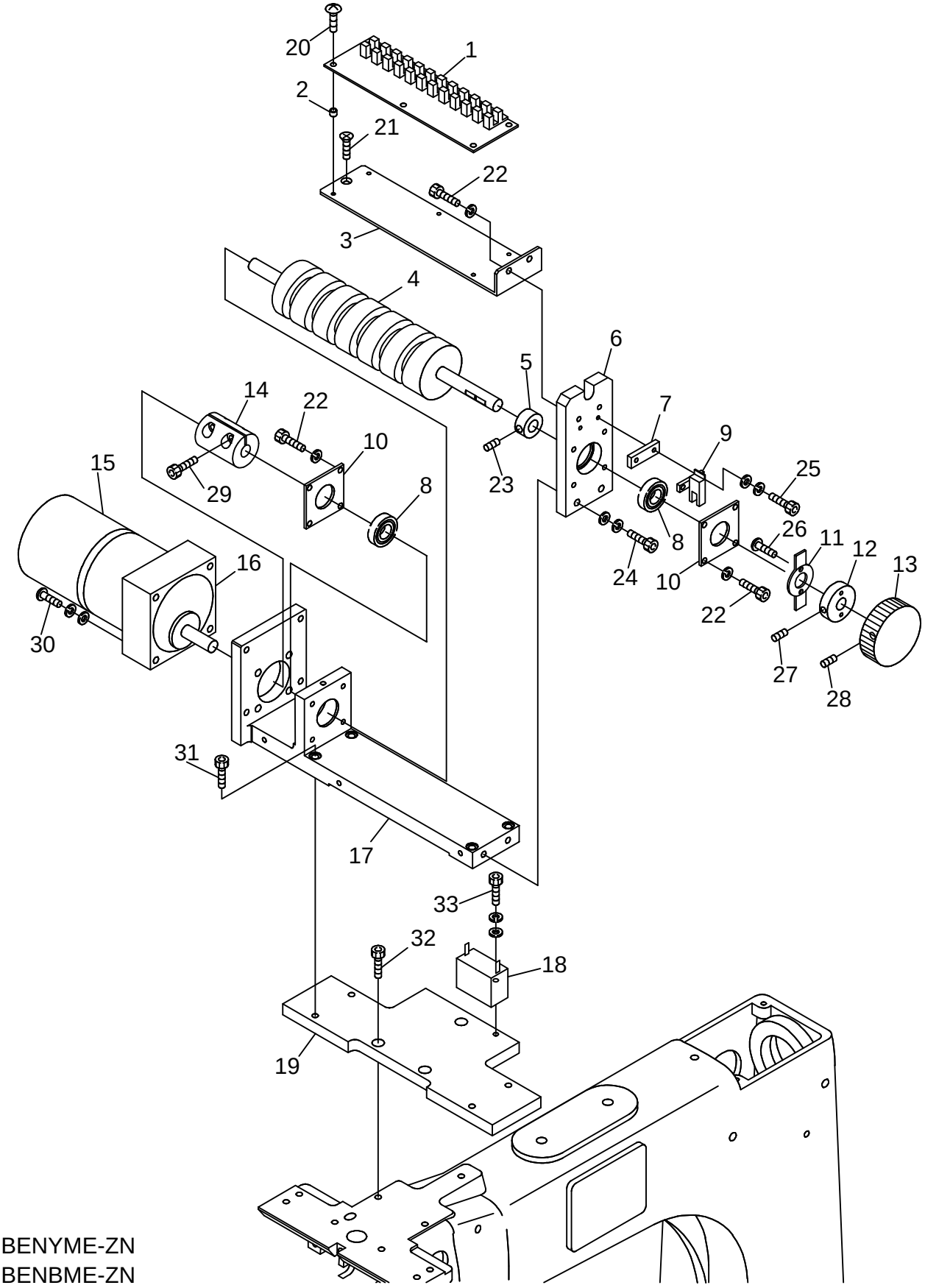

BENYME-ZN
BENBME-ZN

07A-1 Color Change A (ZN)

ITEM	LIST NO.	DESCRIPTION	QTY	NOTE
1.	EBY01623	3770 Color Change Board (ZN)	1	
2.	A9012208	Spacer, Roll Bushing (5.0 Dia.x4L)	5	
3.	KX330300	Color Change Board Base Plate	1	
4.	KX330060	Color Change Cam (ZN)	1	
5.	KX330120	Bearing Collar	1	
6.	LA330170	Color Change Slide Plate (ZN-A)	1	
7.	KX330250	Sensor Spacer	1	
8.	A9010062	Bearing (6000ZZ)	2	
9.	A9060063	Micro Sensor (EE-SX672A OMRON)	1	
10.	KX330110	Bearing Bracket (ZN)	2	
11.	KX330271	Lock Sensor Dock	1	
12.	KC330170	Detection Plate Collar	1	
13.	KX330130	Manual Knob	1	
14.	RD330020	Motor Coupling	1	6T Max
	RD330030	Motor Coupling	1	8T Min
15.	A9065092	Reversible Motor (3RJ10GB-AUL-E4)	1	6T Max
	A9065078	Reversible Motor (3RK15GN-AUL-E13)	1	8T Min
16.	A9065093	Gear Head (3GB18K)	1	6T Max
	A9065079	Gear Head (3GN18K)	1	8T Min
17.	LA330151	Color Change Base (ZN-A)	1	
18.	A9054022	Condenser (CH45UL)	1	6T Max
	A9054023	Condenser (CH60UL)	1	8T Min
19.	LA330120	Color Change Base Plate	1	
20.		Truss Screw M3x10		
21.		Flush Screw M4x6		
22.		Hex Socket Bolt M4x10 (with Spring Washer)		
23.		Hex Socket Set Screw M6x5		
24.		Hex Socket Bolt M5x25 (with Washers)		
25.		Hex Socket Bolt M3x16 (with Washers)		
26.		Truss Screw M4x8		
27.		Hex Socket Set Screw M5x10		
28.		Hex Socket Set Screw M6x6		
29.		Hex Socket Bolt M5x16		
30.		Pan Screw M4x60 (with Spring Washer)		
31.		Hex Socket Bolt M5x25		
32.		Hex Socket Bolt M5x18		
33.		Hex Socket Bolt M4x10 (with Washers)		

07A-2 COLOR CHANGE A (ZQ)

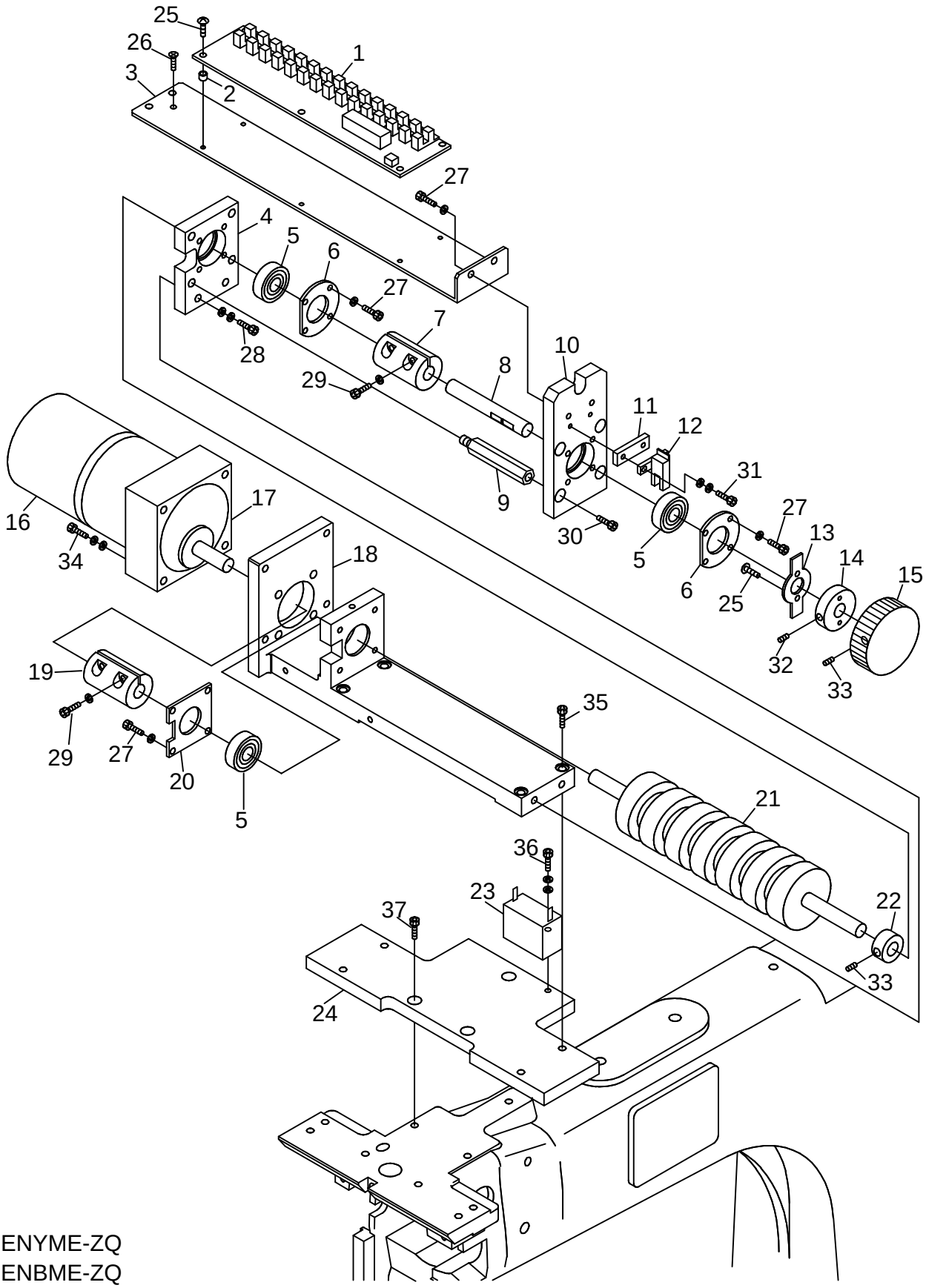

BENYME-ZQ
BENBME-ZQ

07A-2 Color Change A (ZQ)

ITEM	LIST NO.	DESCRIPTION	QTY	NOTE
1.	EBY01650	3772 Color Change Board (ZQ)	1	
2.	A9012208	Spacer, Roll Bushing (5.0 Dia.x4L)	5	
3.	RD330081	Color Change Board Base Plate	1	
4.	LA330060	Color Change Side Plate (ZQ-A)	1	
5.	A9010062	Bearing (6000ZZ)	3	
6.	RD330070	Bearing Plate (ZQ)	2	
7.	RD330030	Coupling	1	6T Max
			2	8T Min
8.	RD330040	Connecting Shaft	1	
9.	RD330050	Stud Bolt	4	
10.	LA330040	Color Change Slide Plate (ZQ-A)	1	
11.	KX330250	Sensor Spacer	1	
12.	A9060063	Micro Sensor (EE-SX672A OMRON)	1	
13.	KX330271	Lock Sensor Dock	1	
14.	KC330170	Detection Plate Collar	1	
15.	KX330130	Manual Knob	1	
16.	A9065092	Reversible Motor (3RJ10GB-AUL-E4)	1	6TMax
	A9065078	Reversible Motor (3RK15GN-AUL-E13)	1	8T Min
17.	A9065093	Gear Head (3GB18K)	1	6T Max
	A9065079	Gear Head (3GN18K)	1	8T Min
18.	LA330091	Color Change Base (ZQ-A)	1	
19.	RD330020	Motor Coupling	1	6T Max
20.	RD330060	Bearing Bracket (ZQ)	2	
21.	RD330150	Color Change Cam (ZQ)	1	
22.	KX330120	Bearing Collar	1	
23.	A9054022	Condenser (CH45UL)	1	6T Max
	A9054023	Condenser (CH60UL)	1	8T Min
24.	LA330120	Color Change Base Plate	1	
25.		Truss Screw M3x8		
26.		Flush Screw M4x6		
27.		Hex Socket Bolt M4x10 (with Spring Washer)		
28.		Hex Socket Bolt M5x25 (with Washers)		
29.		Hex Socket Bolt M4x25 (with Spring Washer)		
30.		Hex Socket Bolt M5x15		
31.		Hex Socket Bolt M3x16 (with Washers)		
32.		Hex Socket Set Screw M5x10		
33.		Hex Socket Set Screw M6x6		
34.		Hex Socket Bolt M4x60 (with Washers)		
35.		Hex Socket Bolt M5x25		
36.		Hex Socket Bolt M4x10 (with Washers)		
37.		Hex Socket Bolt M5x18		

07B COLOR CHANGE B

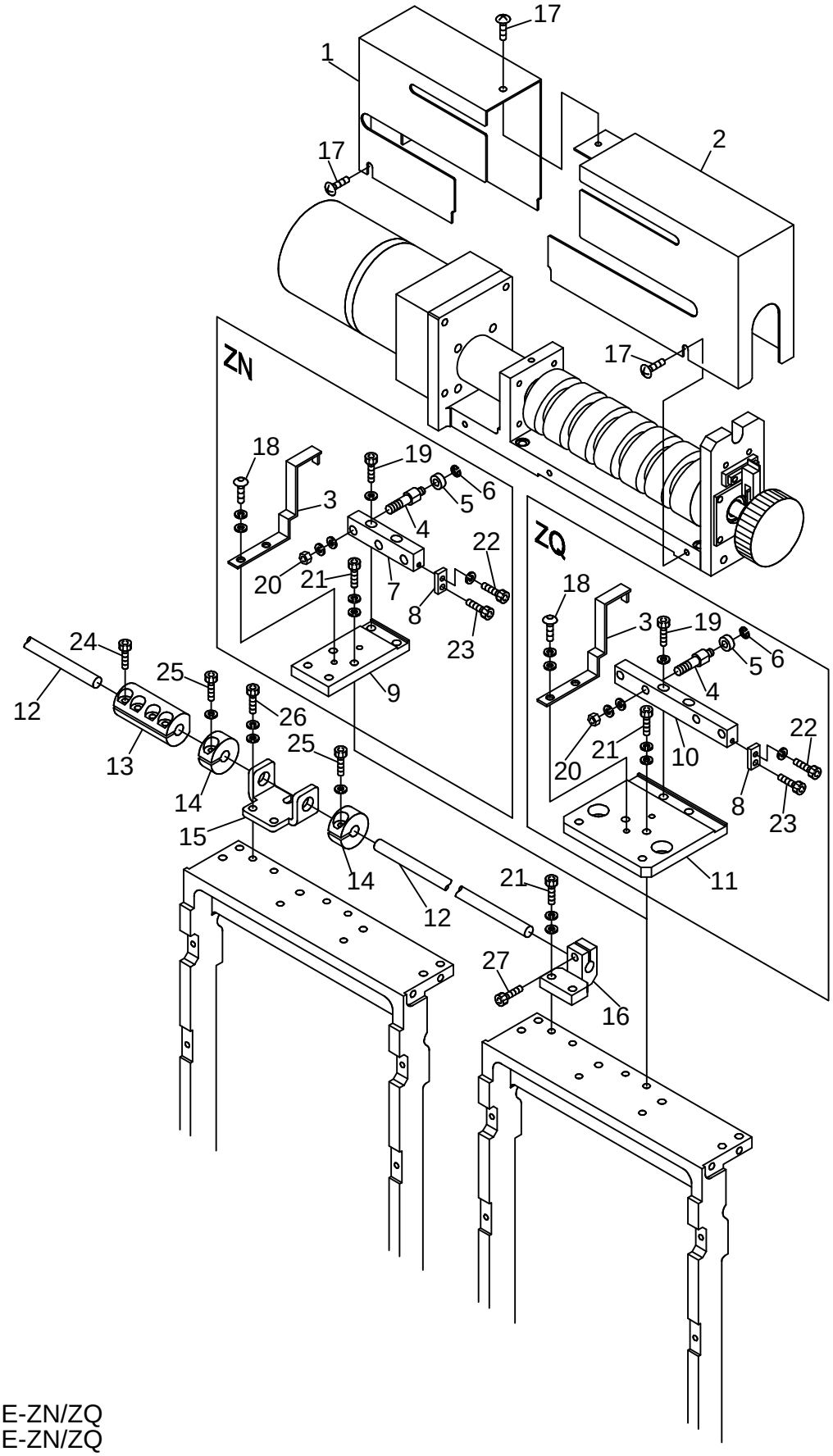

BENYME-ZN/ZQ
BENBME-ZN/ZQ

07B Color Change B

(H=Head Qty) (Depends on Machine)

ITEM	LIST NO.	DESCRIPTION	QTY	NOTE
1.	LA330071	Color Change Cover (L)	1	
2.	LA330141	Color Change Cover (R) (ZN-A)	1	ZN
	LA330081	Color Change Cover (R) (ZQ-A)	1	ZQ
3.	LA330050	Needle Position Sensor Dock (ZQ/ZNA)	1	
4.	LA330110	Connecting Collar Shaft	2	ZN
			4	ZQ
5.	A9010063	Bearing (MR105ZZ) (NSK)	2	ZN
			4	ZQ
6.	A9012127	E-ring (3.0 Dia.)	2	ZN
			4	ZQ
7.	KX330170	Connecting Block (ZN-A)	1	ZN Only
8.	KX330240	Tension Bracket	1	
9.	LA330180	Connecting Base Plate (ZN-A)	1	ZN Only
10.	LA330200	Connecting Block (ZN-A)	1	ZQ Only
11.	LA330190	Connecting Base Plate (ZQ-A)	1	ZQ Only
12.	A100276	Connecting Rod, 8mm (L=820)		
	A100277	Connecting Rod, 8mm (L=1135)		
13.	LA330160	Rod Joint	3	
14.	KX230240	Head Positioning Collar (Color Change Rod)	Hx2-2	Except for First Head
15.	KX230230	Joint Bracket	H-1	Except for First Head
16.	KX230170	Joint Block (First Head)	1	
17.		Truss Screw M4x6		
18.		Hex Socket Button Bolt M4x8 (with Washers)		
19.		Hex Socket Bolt M6x25 (with Plain Washer)		
20.		Hex Nut M6 (with Washers)		
21.		Hex Socket Bolt M5x18 (with Washers)		
22.		Hex Socket Bolt M3x8 (with Washers)		
23.		Hex Socket Bolt M4x25		
24.		Hex Socket Bolt M4x14 (with Washers)		Except for First Head
25.		Hex Socket Bolt M4x16 (with Plain Washer)		Except for First Head
26.		Hex Socket Bolt M5x14 (with Washers)		Except for First Head
27.		Hex Socket Bolt M5x14		Except for First Head

08 DRIVE

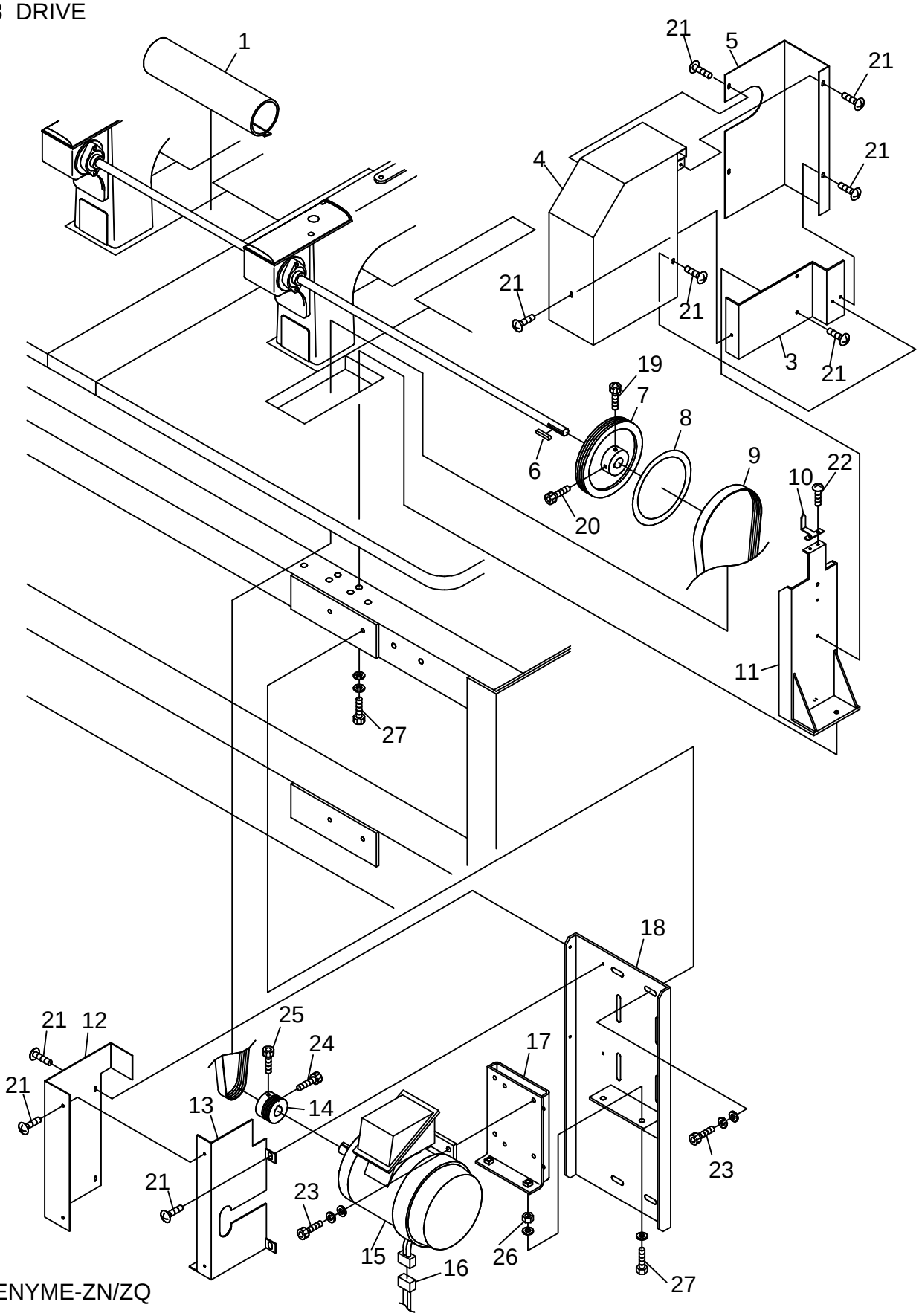

BENYME-ZN/ZQ

BENBME-ZN/ZQ

08 Drive

(* Depends on Machine Type)

ITEM	LIST NO.	DESCRIPTION	QTY	NOTE
1.		Shaft Cover Set (4-Head)	1	*
		Shaft Cover Set (6-Head)	1	*
2.				
3.	LA310020	ZQ/ZNA Belt Cover Bracket (2-6)	1	
4.	LA310040	ZQ/ZNA Belt Cover, Rear (2-6)	1	
5.	LA310030	ZQ/ZNA Belt Cover (2-6)	1	
6.	WW310210	Key (Cross Cut) 6x6x35	1	
7.	KN310000	Driving Pulley (152.2 Dia.)	1	
8.	HP313691	Angle Label (B)	1	
9.	A9020186	Main Motor Belt, ZQ/ZNA (4PK-1270)	1	
10.	KV310090	Angle Indicator (2-6)	1	
11.	LA310050	ZQ/ZNA Belt Cover Base (2-6)	1	
12.	LA310130	ZQ/ZNA Motor Pulley Cover	1	
13.	LA310120	ZQ/ZNA Motor Pulley Cover Bracket	1	
14.	KN310010	Motor Pulley (48.6)	1	
15.	HV310220	Main Motor (1K-FBK-84P-0.55KW VF3) (ETL)	1	
16.	A100278	Main Motor Cable (NY)	1	
17.	KV310080	Motor Mounting Bracket	1	
18.	LA310110	Motor Base (ZQ/ZNA)	1	
19.		Hex Socket Bolt M5x18	1	
20.		Hex Socket Bolt M5x20	1	
21.		Phillips Truss Screw M4x6		
22.		Pan Screw M4x6		
23.		Hex Socket Bolt M8x20		
24.		Hex Socket Bolt M6x18		
25.		Hex Socket Bolt M6x15		
26.		Hex Nut M8		
27.		Hex Bolt M8x60		

09 CONNECTING SHAFT

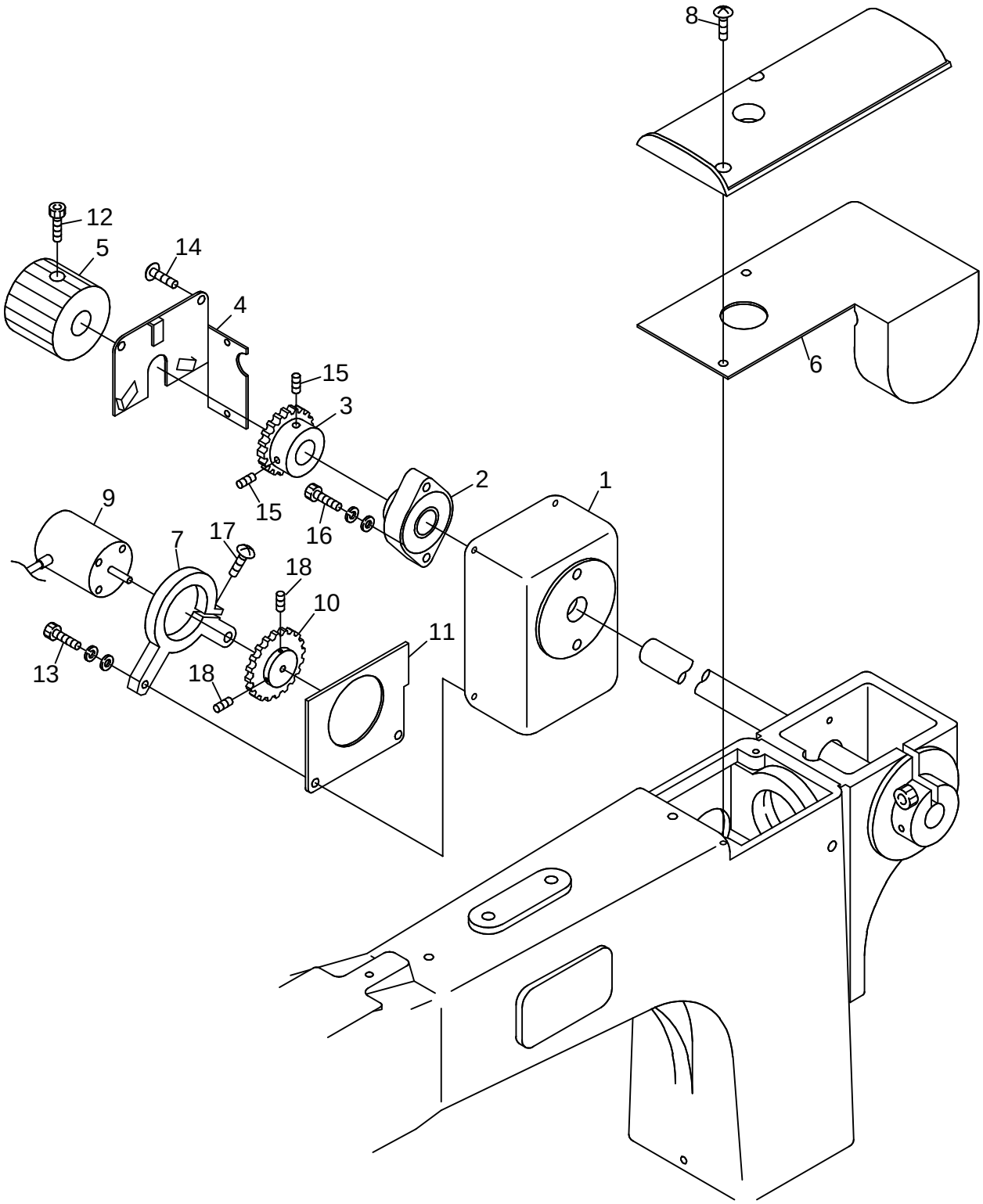

BENYME-ZN/ZQ
BENBME-ZN/ZQ

09 Connecting Shaft

ITEM	LIST NO.	DESCRIPTION	QTY	NOTE
1.	KR310090	Encoder Box	1	
2.	HP321140	Upper Shaft Connecting Collar Bearing	1	
3.	KR310130	Encoder Drive Gear No. 1	1	
4.	KR310120	Encoder Box Cover (A)	1	
5.	A110083	Hand Pulley	1	
6.	KR330110	Shaft End Cover (First Head)	1	
7.	KC312890	Encoder Support	1	
8.		Truss Screw M4x10		
9.	KN511020	Position Encoder (051)	1	
10.	KR310100	Encoder Drive Gear No. 2	1	
11.	KR310110	Encoder Box Cover (B)	1	
12.		Hex Socket Bolt M6x12		
13.		Hex Socket Bolt M6x20		
14.		Truss Screw M4x6		
15.		Hex Socket Set Screw M5x10		
16.		Hex Socket Bolt M6x40		
17.		Truss Screw M4x15		
18.		Hex Socket Set Screw M4x10		

10A PANTOGRAPH DRIVE A

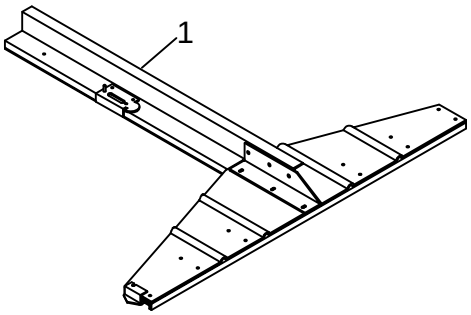

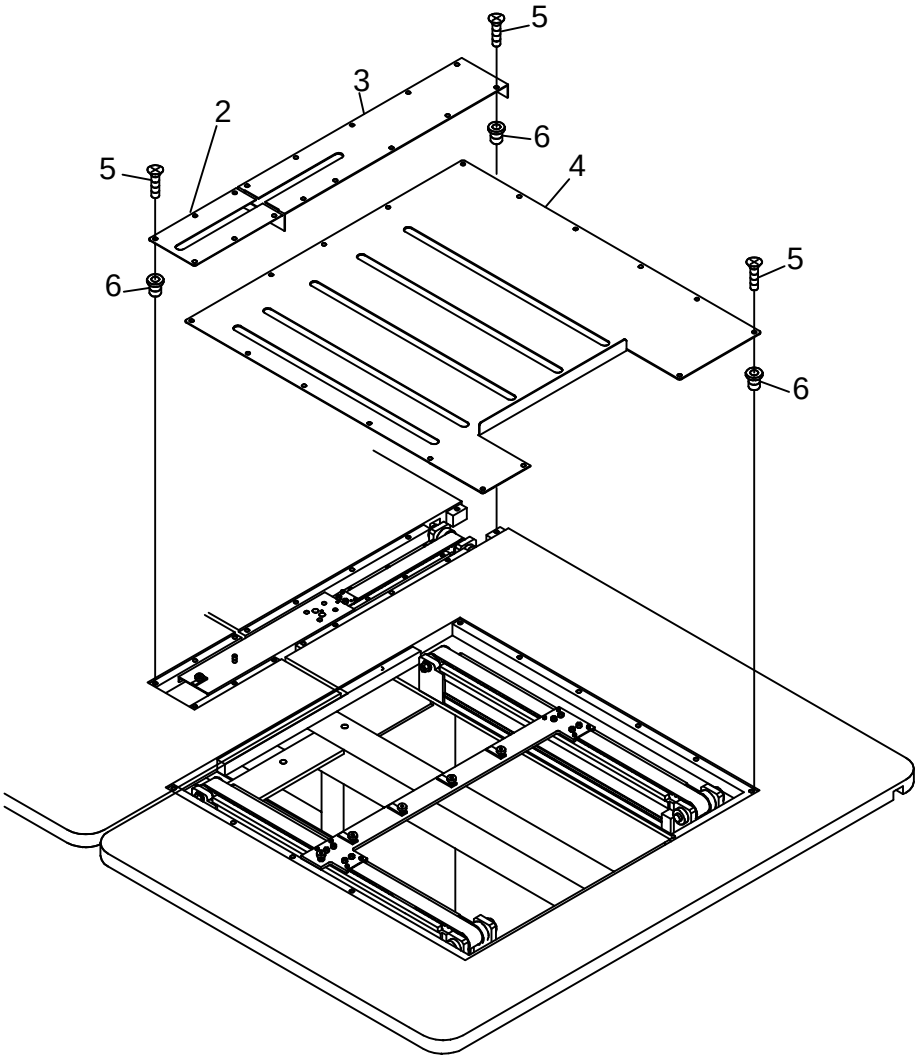

BENYME-ZN/ZQ
BENBME-ZN/ZQ

10A Pantograph Drive A

(R=H-Direction Rail Qty) (*Depends on Machine)

ITEM	LIST NO.	DESCRIPTION	QTY	NOTE
1.	A100401	ZQ/ZNA Tubular Pantograph (4-520)	1	*
	A100260	ZQ/ZNA Tubular Pantograph (6-520)	1	*
2.	A100496	H-Guide Cover (Front), ZQ/ZNA 2-6	Rx1	
3.	A100494	H-Guide Cover (Rear), ZQ/ZNA	Rx1	
4.	A100459	ZQ/ZNA V-Drive Cover (520)	1	
5.		Screw, 8-32 x 3/8” Phillips Undercut Flat Head		
6.	A100140	#8-32 Wood Insert		

10B-1 PANTOGRAPH DRIVE B

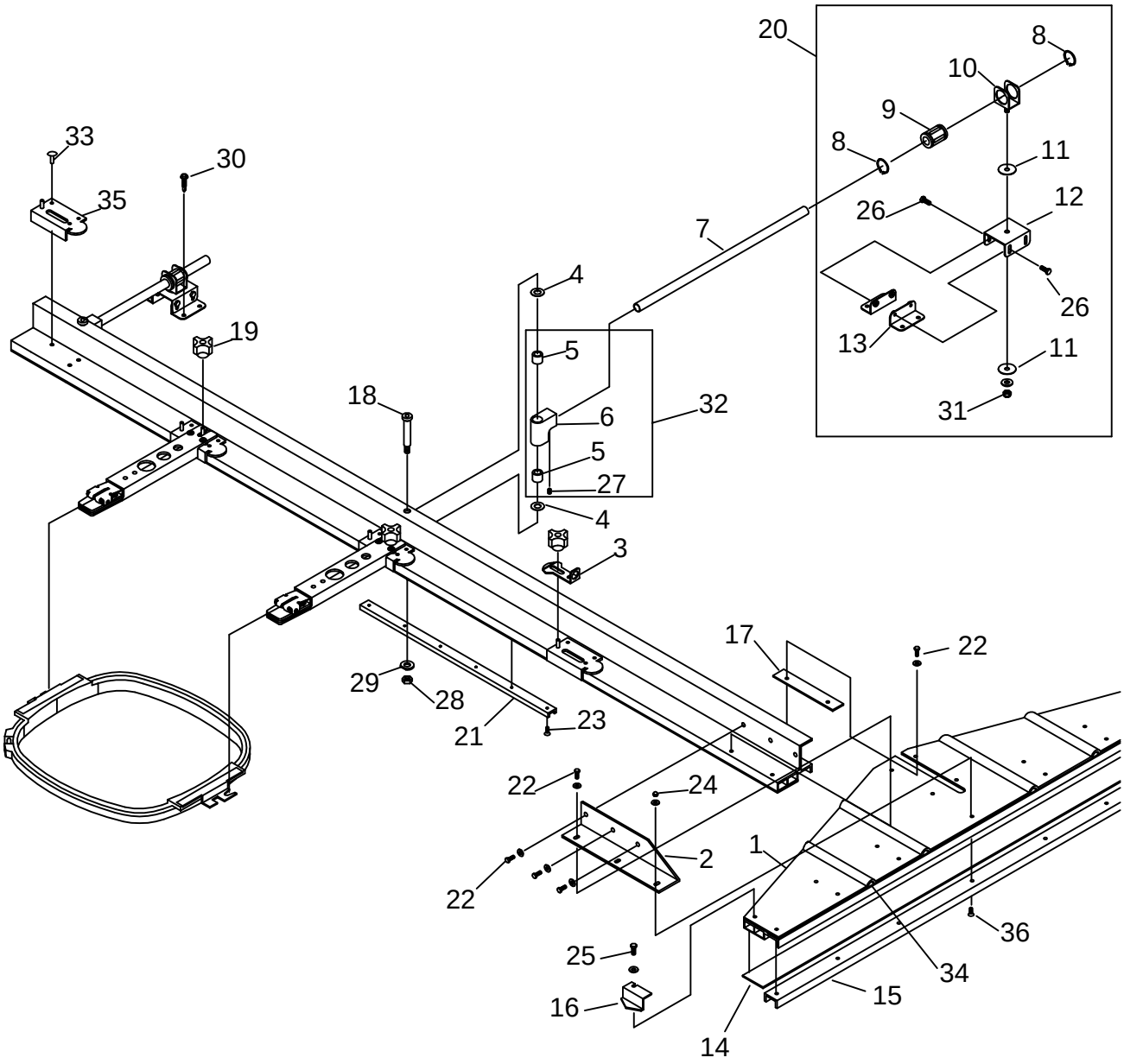

BENYME-ZN/ZQ
BENBME-ZN/ZQ

10B-1 Pantograph Drive B

(S=Set Qty)

ITEM	LIST NO.	DESCRIPTION	QTY	NOTE
1.	A200083	Pantograph Stiffening Guide	1	
2.	A200084	Bracket, Pantograph	1	
3.	A200081	Bracket, Hoop Retaining	Sx1	
4.	A200105	Washer, Nylon	Sx2	
5.	A200106	Needle Bearing	Sx2	
6.	A200088	Swivel Bracket	Sx1	
7.	A100080	Tube, Pantograph Guide (20”)	Sx1	
8.	A100103	Ring, Turret Bearing Retaining	Sx2	
9.	A100102	Bearing, Turret	Sx1	
10.	A200080	Bracket, Ball Bushing Retaining	Sx1	
11.	A100101	Washer, Turret Mounting	Sx2	
12.	A200078	Bracket, Upper Turret	Sx1	
13.	A200079	Bracket, Lower Turret	Sx2	
14.	A100105	Felt, Pantograph	1	
15.	A200094	Pantograph Bearing Guide (32”)	1	
16.	A200129	Pointer, Pantograph	1	
17.	A200085	Shim, Pantograph Bracket	1	
18.	A200103	Screw, 5/16 -18 x 1¾” Shoulder	Sx1	
19.	P820710	Knob, ¼-20 Phenolic		
20.	A100104	Turret Bracket Assembly		
21.	A200157	Pantograph Bearing Guide (22”)		
22.		Screw, 8-32 x ½” Hex Head		
23.		Screw, 8-32 x 5/8” Phillips Flat Head		
24.		Nut, 10-32 Acorn		
25.		Screw, 10-32 x ½” Hex Head		
26.		Screw, 10-32 x 1¼” Hex Head		
27.		Screw, 10-32 x ¼” Socket Cup Point Set		
28.		Nut, 5/16-18 Nylock		
29.		Washer, Half Cut Steel		
30.		Screw, 8-18 x ¾” Hex Head (No. 2 Tek)		
31.		Nut, ¼-20 Nylock		
32.	A200090	Swivel Bracket Assembly		
33.	A200089	Retaining Bracket Rivet		
34.	A200086	Stiffening Guide Shim		
35.	A200076	Large Retaining Bracket		
36.		Screw, 10-32 x ¾” Phillips Flat Head		

10B-2 PANTOGRAPH HOOP SUPPORT ARM

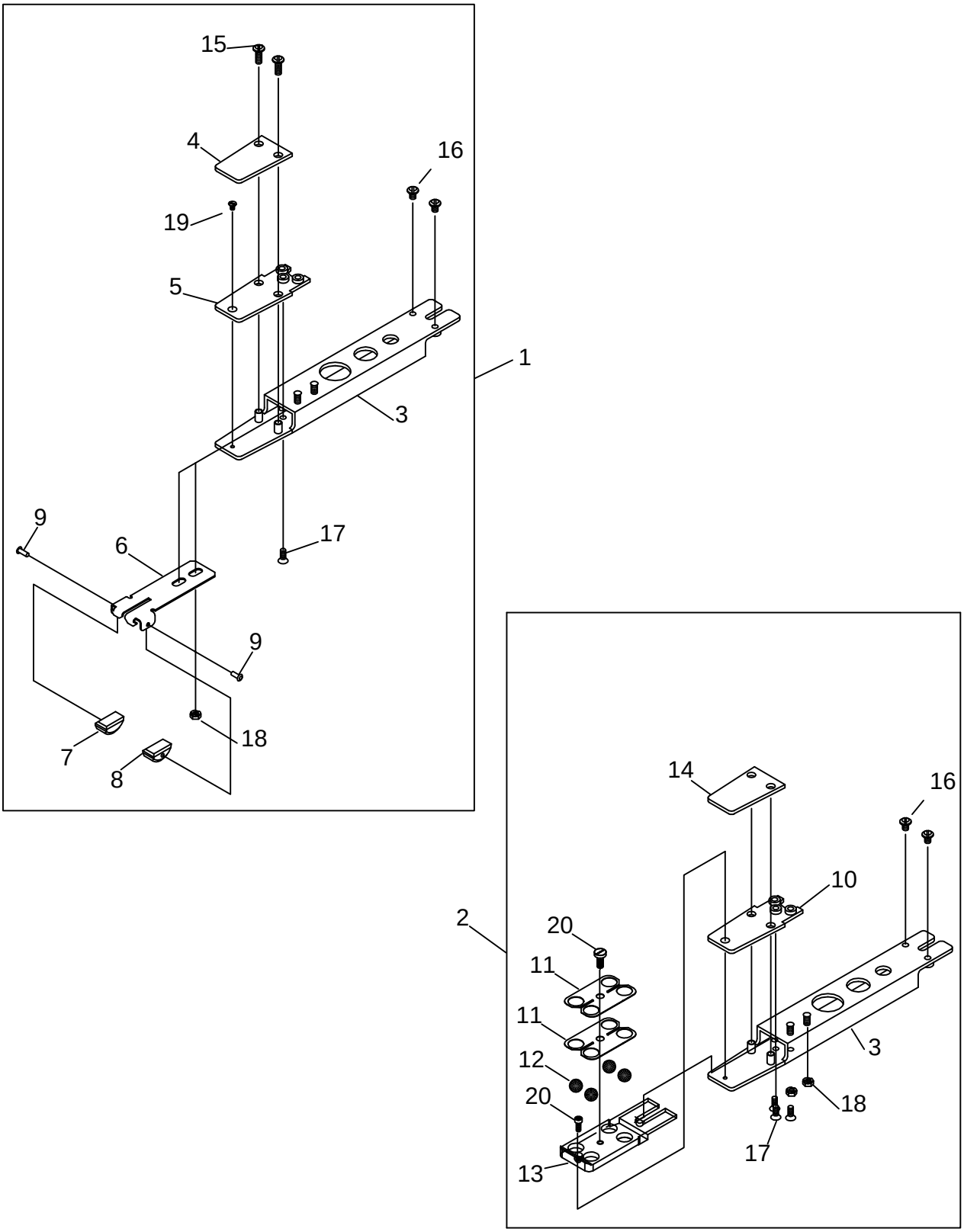

BENYME-ZN/ZQ
BENBME-ZN/ZQ

10B-2 Pantograph Hoop Support Arm

ITEM	LIST NO.	DESCRIPTION	QTY	NOTE
1.	A200099	Assembly, Hoop Support Arm	1	
2.	A200168	Assembly, Hoop Support Arm (Ball Clip)	1	
3.	A200132	Arm, Hoop Support	1	
4.	A200093	Tongue, Nylon	1	
5.	A100107	Tongue, Steel	1	
6.	A100108	Clamp, Hoop Support	1	
7.	A200158	Button, Right Hoop Support	1	
8.	A200159	Button, Left Hoop Support	1	
9.	A200167	Rivet, Hoop Support Button	1	
10.	A100376	Ball Clip Steel Plate	1	
11.	A100372	Ball Clip Stainless Spring	2	
12.	A100373	Ball Clip 1/2" Steel Ball	4	
13.	A100374	Ball Clip Aluminum Ball Holder	1	
14.	A100375	Ball Clip Nylon Wear Plate	1	
15.		Screw, 10-32 x 3/8” Slotted Pan Head		
16.		Screw, 10-32 x 3/16” Slotted Pan Head		
17.		Screw, 8-32 x ¼” Flat Head		
18.		Nut, 10-32 (KEPS)		
19.		Screw, 6-32 x 3/16” Undercut Flat Head		
20.		Screw, 6-32 x ½” Socket Head Cap		

10C PANTOGRAPH DRIVE C (H-DRIVE)

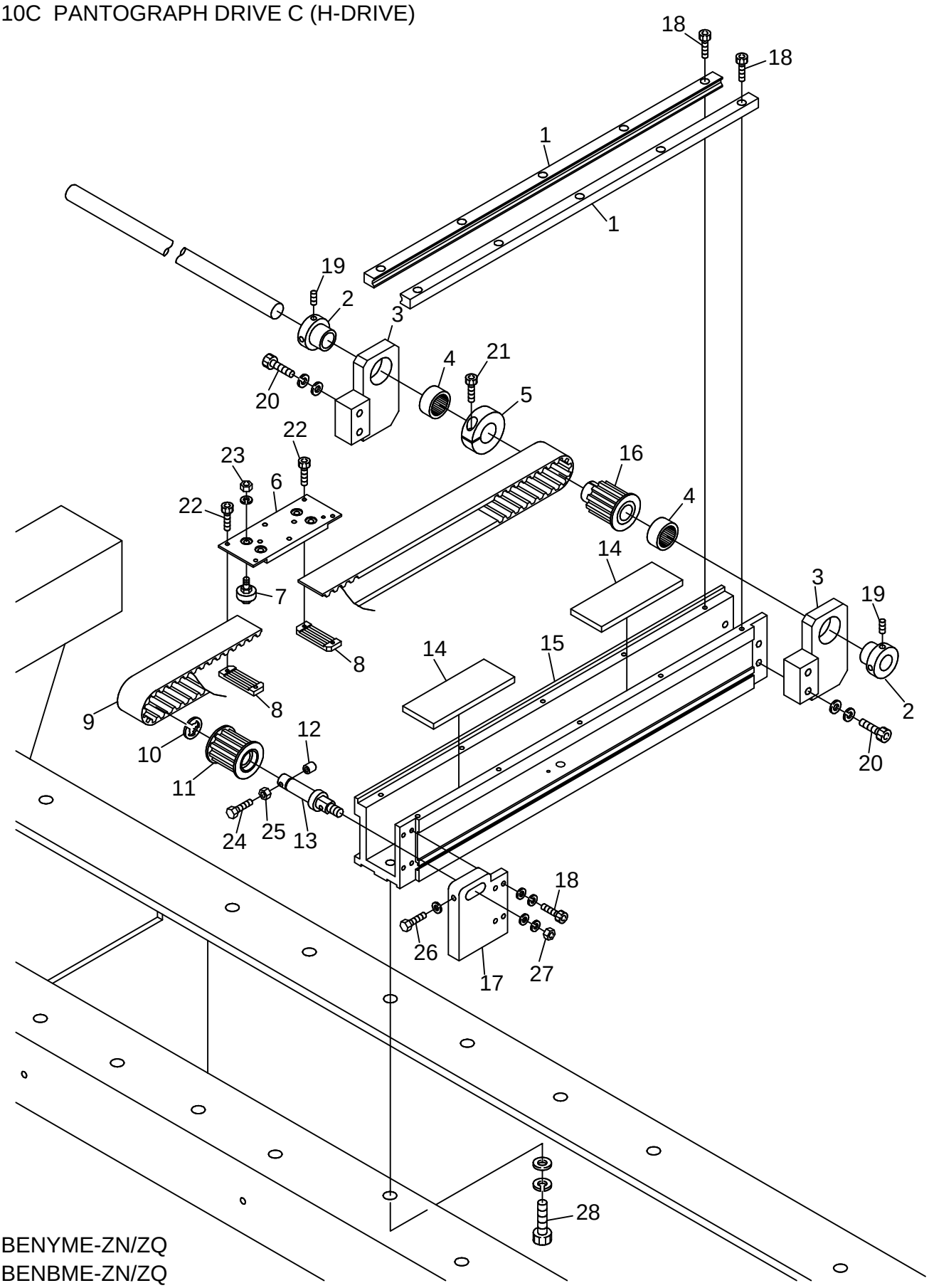

BENYME-ZN/ZQ
BENBME-ZN/ZQ

10C Pantograph Drive C (H-Drive)

(R=H-Direction Rail Qty)

ITEM	LIST NO.	DESCRIPTION	QTY	NOTE
1.	KK480140	H-Guide Rail (430L)	Rx2	
2.	HP321090	Lower Shaft Connecting Collar	Rx2	
3.	LA480040	ZQ/ZNA Rear Pulley Bracket	Rx2	
4.	A9011111	Needle Bearing (TLA2012Z)	Rx2	
5.	HH481980	Clamping Collar (19.0 Dia.)	Rx1	
6.	KR480240	H-Roller Base (Rear)	Rx1	
7.	HP482950	Roller Pin Assembly A	Rx4	
8.	HP482940	Timing Belt Rack (5M)	Rx2	
9.	HV480110	H-Timing Belt (White, S5M)	Rx1	Cut Product
10.	A9012052	E-ring (10.0 Dia.)	Rx1	
11.	HV480050	Pantograph Driving Pulley (Front)	Rx1	
12.	HH482110	Pulley Shaft Bolt Cap	Rx1	
13.	HH481991	Timing Pulley Shaft	Rx1	
14.	KN480061	Rail Base Felt (100x38x6)	Rx2	
15.	A100484	H-Drive Assembly, ZQ/ZNA (453L)	Rx1	
16.	HV480040	H-Drive Pulley, Rear (NS)	Rx1	
17.	HH482000	ZQ/ZNA Front Pulley Bracket	Rx1	
18.		Hex Socket Bolt M4x15		
19.		Hex Socket Set Screw M5x8		
20.		Hex Socket Bolt M6x30		
21.		Hex Socket Bolt M5x18		
22.		Hex Socket Bolt M3x6		
23.		Hex Nut M5		
24.		Hex Socket Bolt M4x35		
25.		Hex Nut M4		
26.		Hex Bolt M4x25		
27.		Hex Nut M8		
28.		Hex Socket Bolt M8x25		

10D PANTOGRAPH DRIVE D

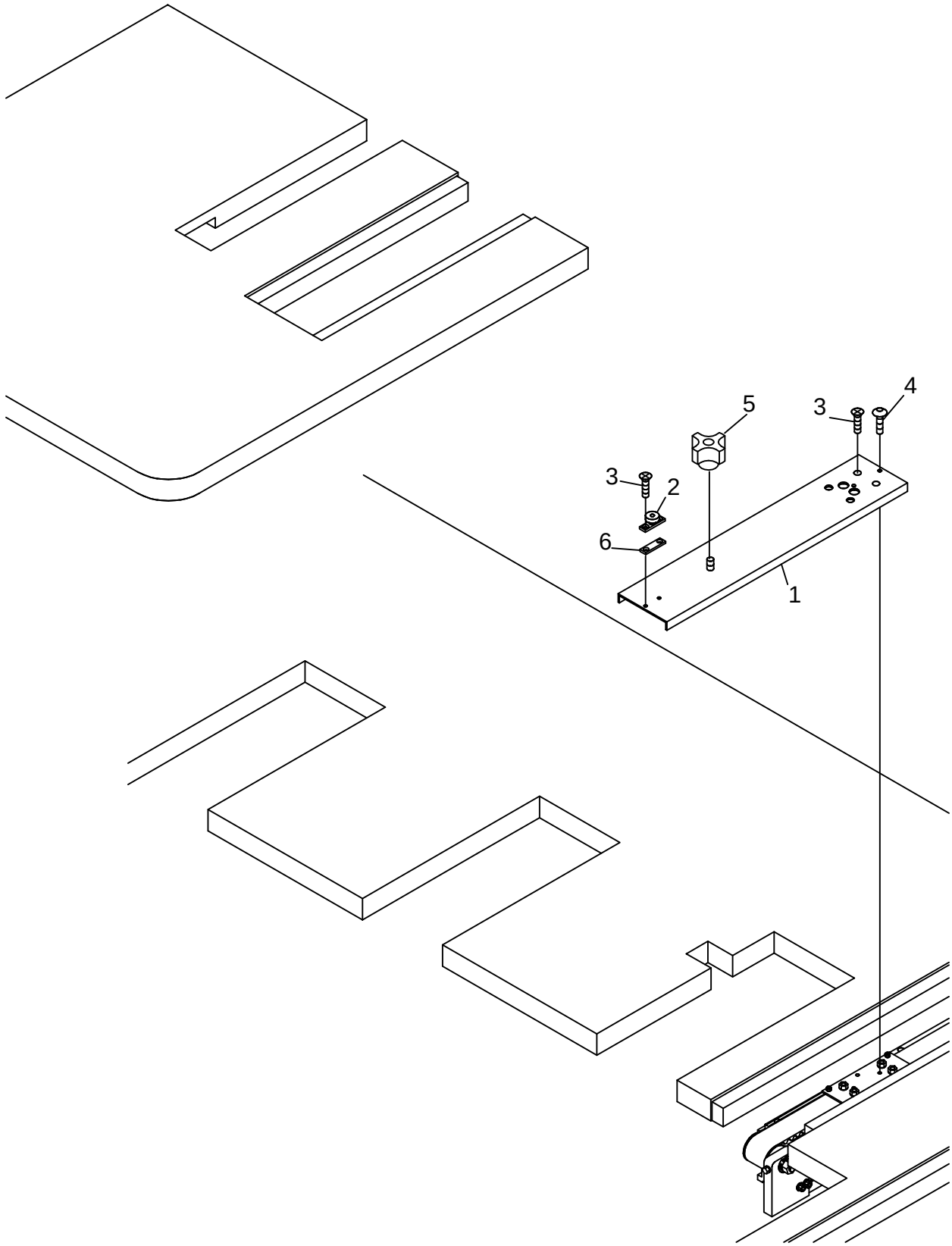

BENYME-ZN/ZQ
BENBME-ZN/ZQ

10D Pantograph Drive D

(R=H-Direction Rail Qty)

ITEM	LIST NO.	DESCRIPTION	QTY	NOTE
1.	LA480120	ZQ/ZNA Front Drive Extension	Rx1	
2.	KK480162	Bearing Shaft Assembly	Rx1	
3.		Flush Screw M4x10 (Undercut)		
4.		Hex Socket Button Bolt M4x6		
5.	A100504	ZQ/ZNA Phenolic Knob (M8x1.25)	Rx1	
6.	A100188	Bearing Spacer (ZN)		

10E PANTOGRAPH DRIVE E

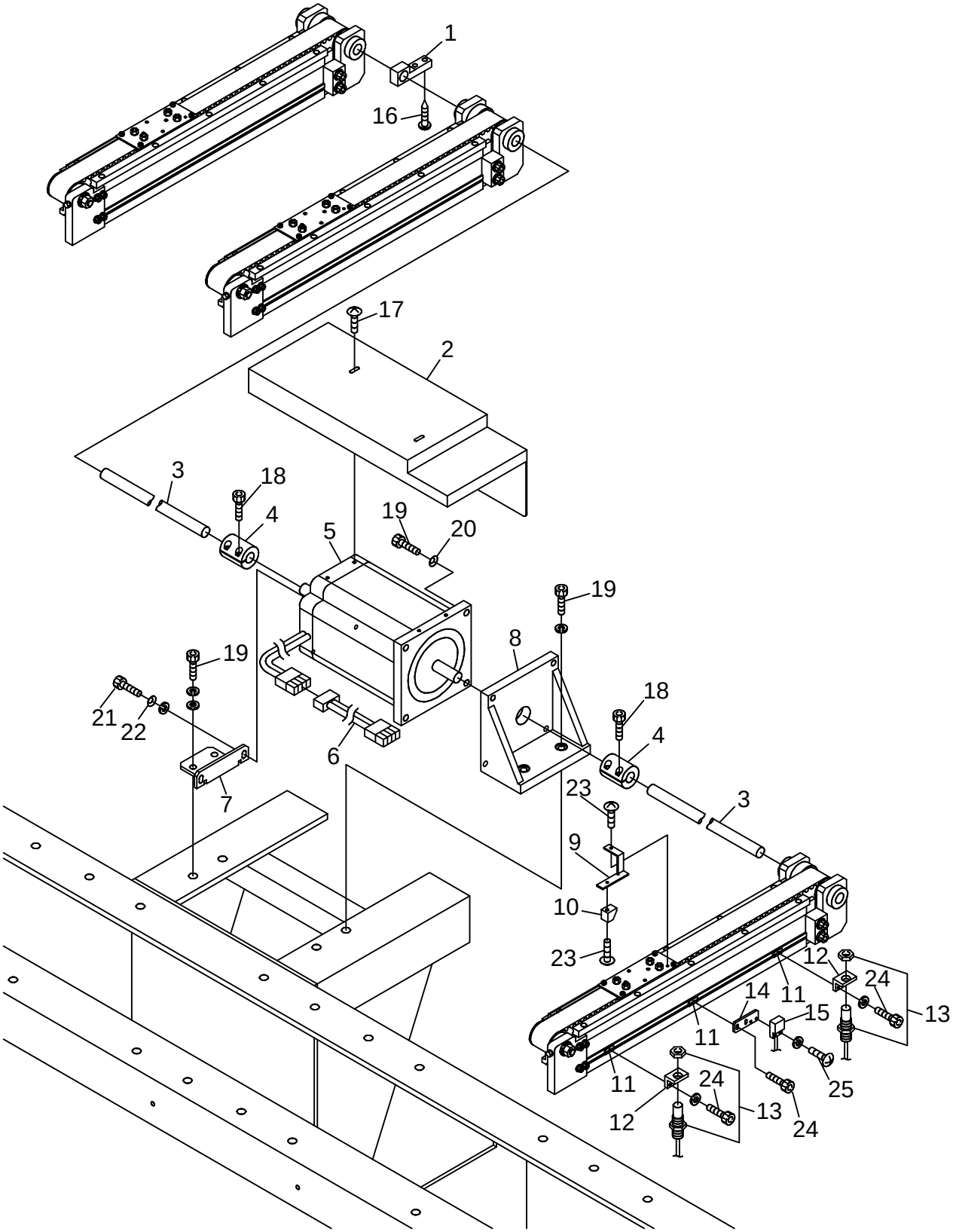

BENYME-ZN/ZQ
BENBME-ZN/ZQ

10E Pantograph Drive E

(*Depends on Machine Type)

ITEM	LIST NO.	DESCRIPTION	QTY	NOTE
1.	HV480070	Pulse Motor Connecting Shaft Support	1	*
2.	A200152	H-Drive Motor Cover (NS)	1	
3.	KC320113	Driving Shaft (15 mm x 12')	2	Cut Product
4.	HH481931	Pulse Motor Coupling	2	
5.	RA480010	NY Pulse Motor (TS3650N1)	1	4-Head
	HV480060	NS Pulse Motor (TS3650N2)		6-Head
6.	A100505	H-Pulse Motor Cable (ZQ/ZNA)	1	
7.	HV480020	H & V Pulse Motor Support Bracket		
8.	HV480010	H & V Pulse Motor Support Casting	1	
9.	LA450010	ZQ/ZNA H-Magnet Bracket	1	
10.	A9052030	Magnet (M-102A-02)	1	
11.	KU460270	Plate Nut (M3)	3	
12.	MT460240	V-Switch Bracket (RS-001)	2	
13.	A9052079	Frame Limit Switch (RS-001)	2	
14.	KN450300	Origin Sensor Mounting Bracket (MH-601A)	1	
15.	A9052031	Origin Sensor Magnet Switch (MH-601A)	1	
16.		#8-18 x 1" Tek Screw		
17.		Truss Screw M4x8		
18.		Hex Socket Bolt M5x18		
19.		Hex Socket Bolt M8x25		
20.		M8 Lock Washer		
21.		Hex Socket Bolt M6x25		
22.		M6 Lock Washer		
23.		Truss Screw M3x6		
24.		Hex Socket Bolt M3x8		
25.		Truss Screw M3x8		

10F PANTOGRAPH DRIVE F (V-DRIVE)

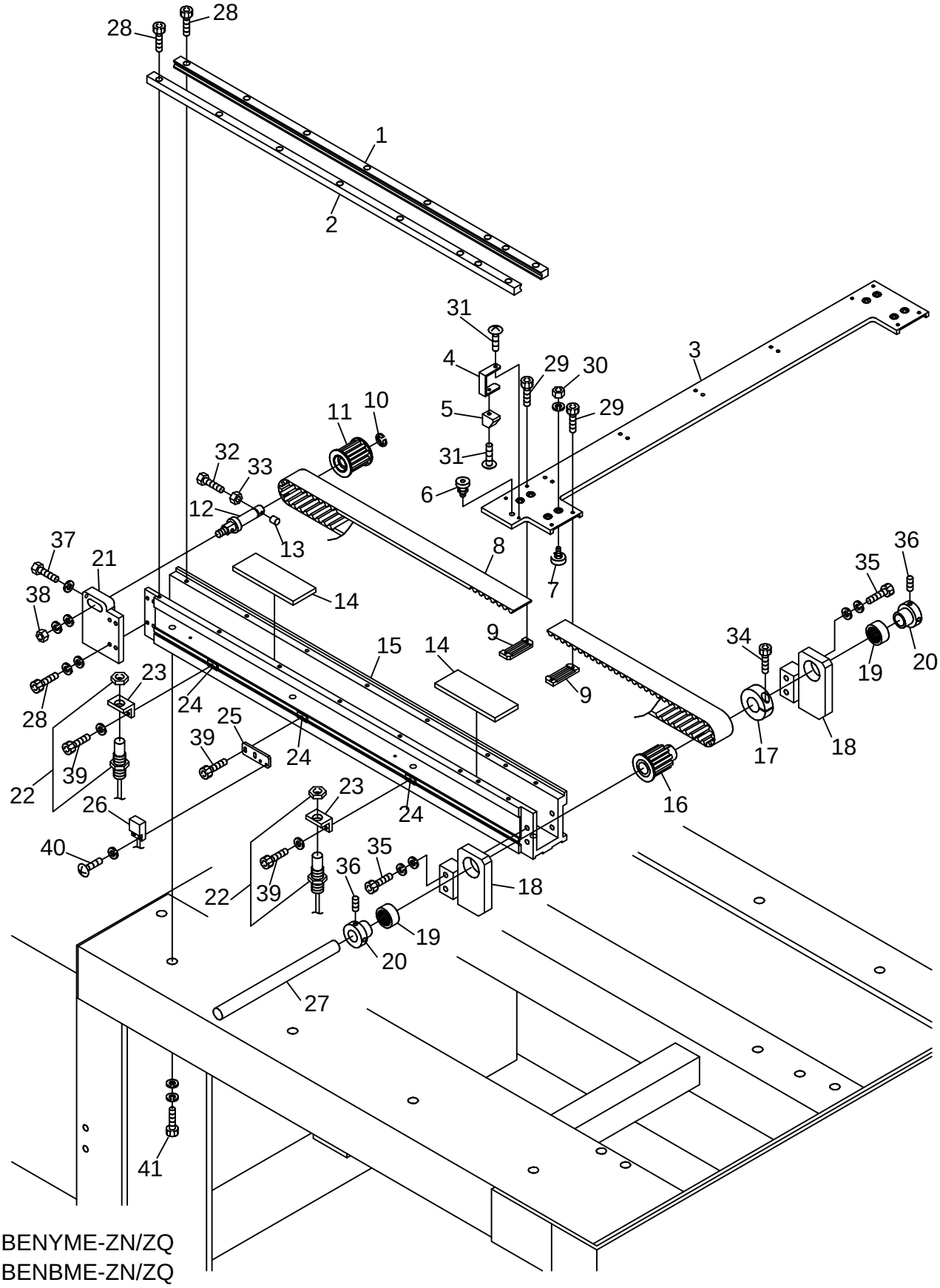

BENYME-ZN/ZQ
BENBME-ZN/ZQ

10F Pantograph Drive F (V-Drive)

ITEM	LIST NO.	DESCRIPTION	QTY	NOTE
1.	KV480080	V-Guide Rail, Right (610L)	1	
2.	KV480090	V-Guide Rail, Left (610L)	1	
3.	LA480150	V-Roller Base	1	
4.	LA450020	ZQ/ZNA V-Magnet Bracket	1	
5.	A9052030	Magnet (M-102A-02)	1	
6.	HP483370	Bearing Pin Assembly	1	
7.	HP482950	Roller Pin Assembly A	4	
8.	HV480110	V-Timing Belt (White, S5M)	1	Cut Product
9.	HP482940	Timing Belt Rack (5M)	2	
10.	A9012052	E-ring (10.0 Dia.)	1	
11.	HV480050	Pantograph Driving Pulley (Front)	1	
12.	HH481991	Timing Pulley Shaft	1	
13.	HH482110	Pulley Shaft Bolt Cap	1	
14.	KN480061	Rail Base Felt (100x38x6)	2	
15.	A100514	ZQ/ZNA-520 V-Drive Assembly (645L)	1	
16.	HV480040	H-Drive Pulley, Rear (NS)	1	
17.	HH481980	Clamping Collar (19.0 Dia.)	1	
18.	LA480040	ZQ/ZNA Rear Pulley Bracket	2	
19.	A9011111	Needle Bearing (TLA2012Z)	2	
20.	HP321090	Lower Shaft Connecting Collar	2	
21.	HH482000	ZQ/ZNA Front Pulley Bracket	1	
22.	A9052079	Frame Limit Switch (RS-001)	2	
23.	MT460240	V-Switch Bracket (RS-001)	2	
24.	KU460270	Plate Nut (M3)	3	
25.	KN450300	Origin Sensor Mounting Bracket (MH-601A)	1	
26.	A9052031	Origin Sensor Magnet Switch (MH-601A)	1	
27.	KC320113	Driving Shaft (15 mm x 12')	1	Cut Product
28.		Hex Socket Bolt M4x15		
29.		Hex Socket Bolt M3x6		
30.		Hex Nut M5		
31.		Truss Screw M3x6		
32.		Hex Socket Bolt M4x35		
33.		Hex Nut M4		
34.		Hex Socket Bolt M5x18		
35.		Hex Socket Bolt M6x30		
36.		Hex Socket Set Screw M5x8		
37.		Hex Socket M4x25		
38.		Hex Nut M8		
39.		Hex Socket Bolt M3x8		
40.		Truss Screw M3x10		
41.		Hex Socket Bolt M8x25		

10G PANTOGRAPH DRIVE G

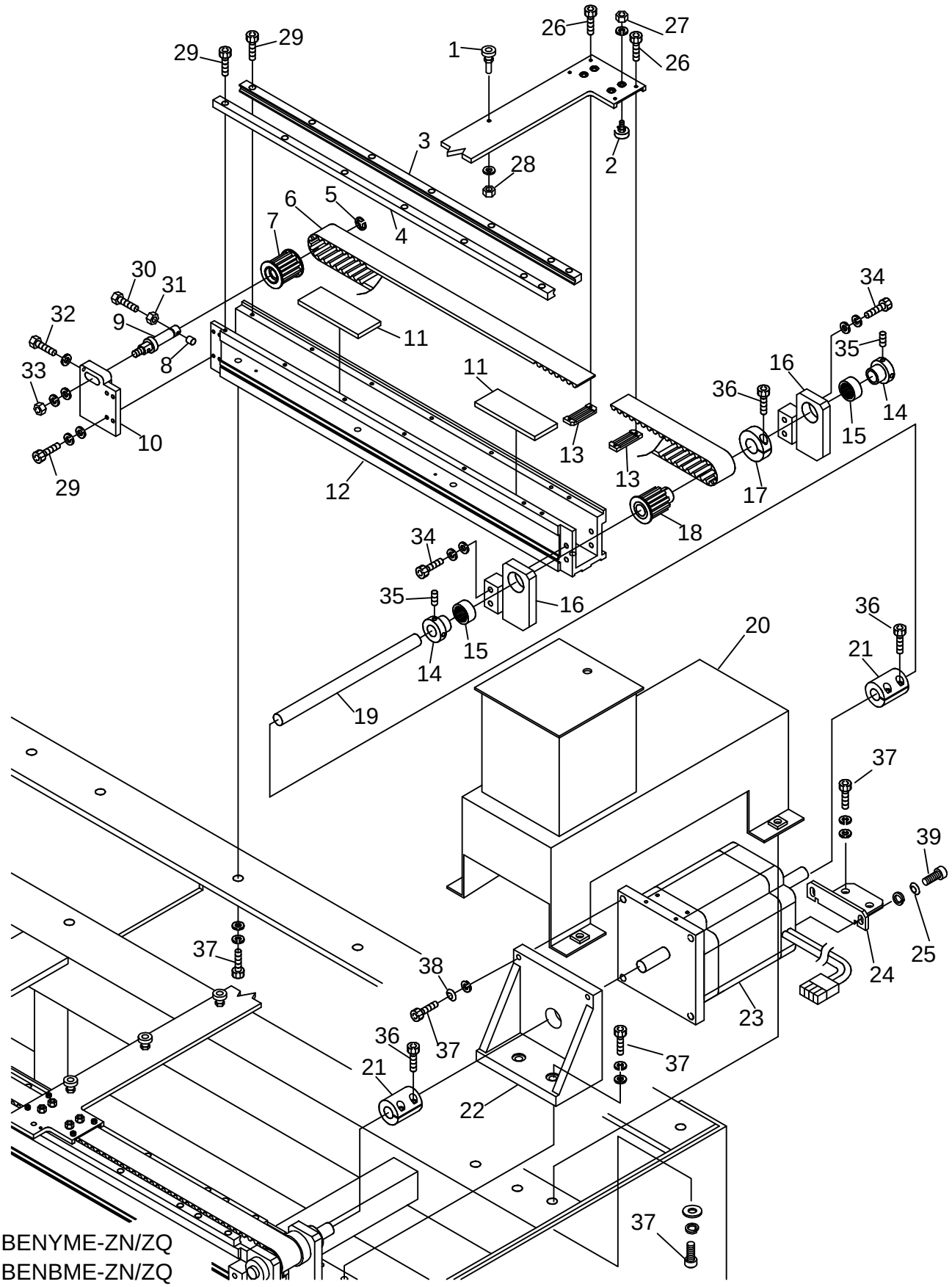

BENYME-ZN/ZQ
BENBME-ZN/ZQ

10G Pantograph Drive G

ITEM	LIST NO.	DESCRIPTION	QTY	NOTE
1.	HP483111	Bearing Pin Assembly B	4	
2.	HP482950	Roller Pin Assembly A	4	
3.	KV480080	V-Guide Rail, Right (610L)	1	
4.	KV480090	V-Guide Rail, Left (610L)	1	
5.	A9012052	E-ring (10.0 Dia.)	1	
6.	HV480110	V-Timing Belt (White, S5M)	1	Cut Product
7.	HV480050	Pantograph Driving Pulley (Front)	1	
8.	HH482110	Pulley Shaft Bolt Cap	1	
9.	HH481991	Timing Pulley Shaft	1	
10.	HH482000	ZQ/ZNA Front Pulley Bracket	1	
11.	KN480061	Rail Base Felt (100x38x6)	2	
12.	A100514	ZQ/ZNA-520 V-Drive Assembly (645L)	1	
13.	HP482940	Timing Belt Rack (5M)	2	
14.	HP321090	Lower Shaft Connecting Collar	2	
15.	A9011111	Needle Bearing (TLA2012Z)	2	
16.	LA480040	ZQ/ZNA Rear Pulley Bracket	2	
17.	HH481980	Clamping Collar (19.0 Dia.)	1	
18.	HV480040	H-Drive Pulley, Rear (NS)	1	
19.	KC320113	Driving Shaft (15 mm x 12')	1	Cut Product
20.	A100453	NS/NY Automat Weldment (ZQ/ZNA)	1	
21.	HH481931	Pulse Motor Coupling	2	
22.	HV480010	H & V Pulse Motor Support Casting	1	
23.	RA480010	NY Pulse Motor (TS3650N1)	1	4-Head
	HV480060	NS Pulse Motor (TS3650N2)	1	6-Head
	EAY046A5	H2129 Pulse Motor Cable (NY-6)	1	
24.	HV480020	H & V Pulse Motor Support Bracket	1	
25.		M6 Lock Washers		
26.		Hex Socket Bolt M3x6		
27.		Hex Nut M5		
28.		Hex Nut M6		
29.		Hex Socket Bolt M4x15		
30.		Hex Socket Bolt M4x35		
31.		Hex Nut M4		
32.		Hex Bolt M4x25		
33.		Hex Nut M8		
34.		Hex Socket Bolt M6x25		
35.		Hex Socket Set Screw M5x8		
36.		Hex Socket Bolt M5x18		
37.		Hex Socket Bolt M8x25		
38.		M8 Lock Washer		
39.		Hex Socket Bolt M6x25		

11A-1-1 CONTROL A (NY)

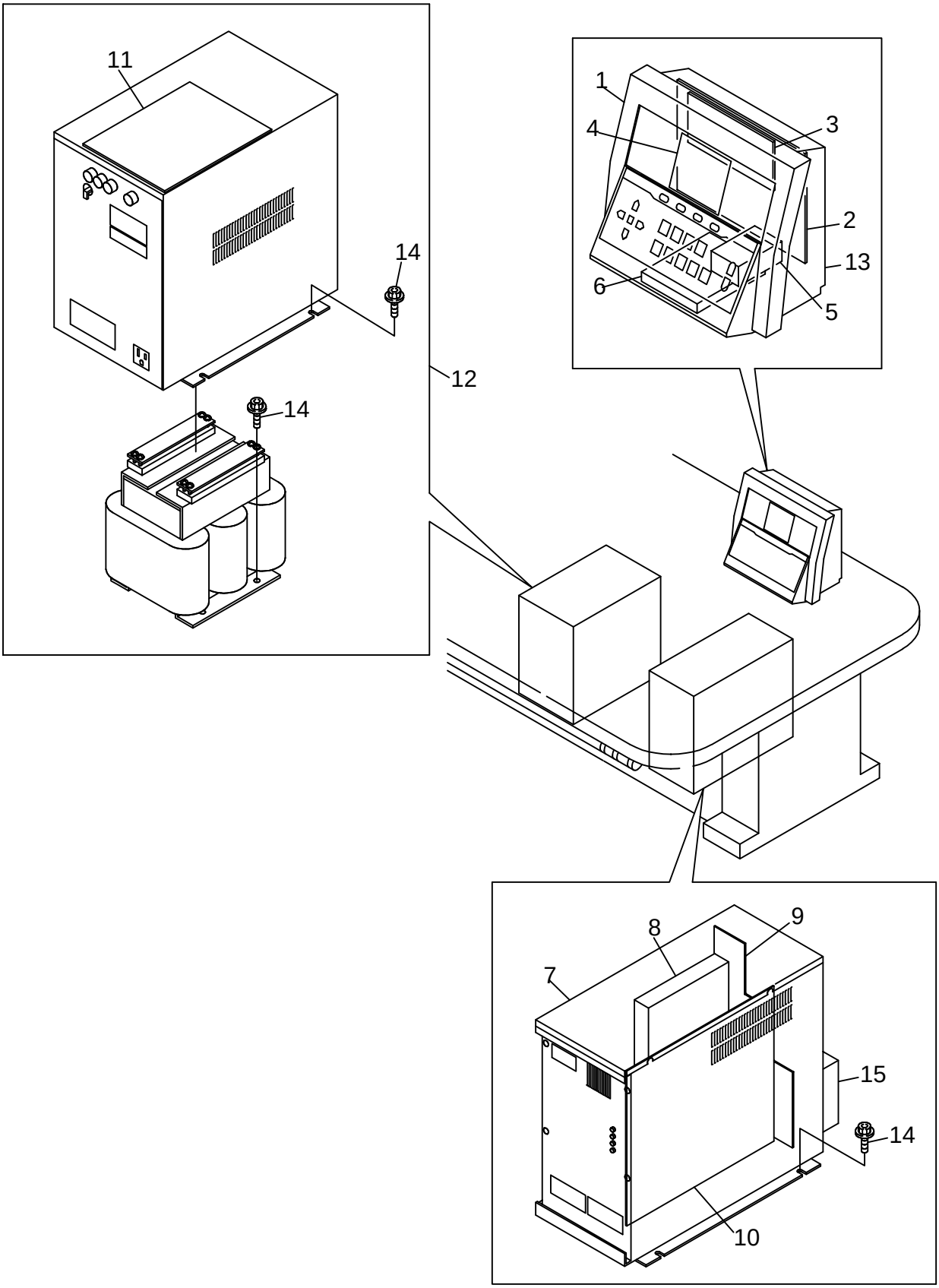

11A-1-1 Control A (NY)

ITEM	LIST NO.	DESCRIPTION	QTY	NOTE
1.	EAY033A1	NS Automat Controller	1	
2.	EBY01250	5611 N CPU Board	1	
3.	EBY01240	5430 N Memory Board	1	
4.	EBY01260	LCD Display (SE-4469-1)	1	
5.	EBY01270	NS Automat Power Supply	1	
6.	EBY01352	Floppy Disk Drive	1	
7.	EAY036A2	NY Driver Unit (UAD-IX)	1	
8.	EBY01620	5751 NY Inverter Board	1	
9.	EBY01400	5820 NY Back Board (UAD-IX)	1	
10.	EBY01390	5810 NY Control Board (UAD-IX)	1	
11.	EBY01420	5310 NY Power Board, 1P (UAD-IX)	1	
	EBY01430	5310 NY Power Board, 3P (UAD-IX)	1	
12.	EAY036A3	NY Transformer, 1P (UAD-IX)	1	
	EAY037A3	NY Transformer, 3P (UAD-IX)	1	
13.	EBY01510	Automat Power Cable	1	
14.		Hex Socket Flange Bolt M6x12		
15.	A100267	Main Power Cable		

11A-1-2 CONTROL A (NY-2)

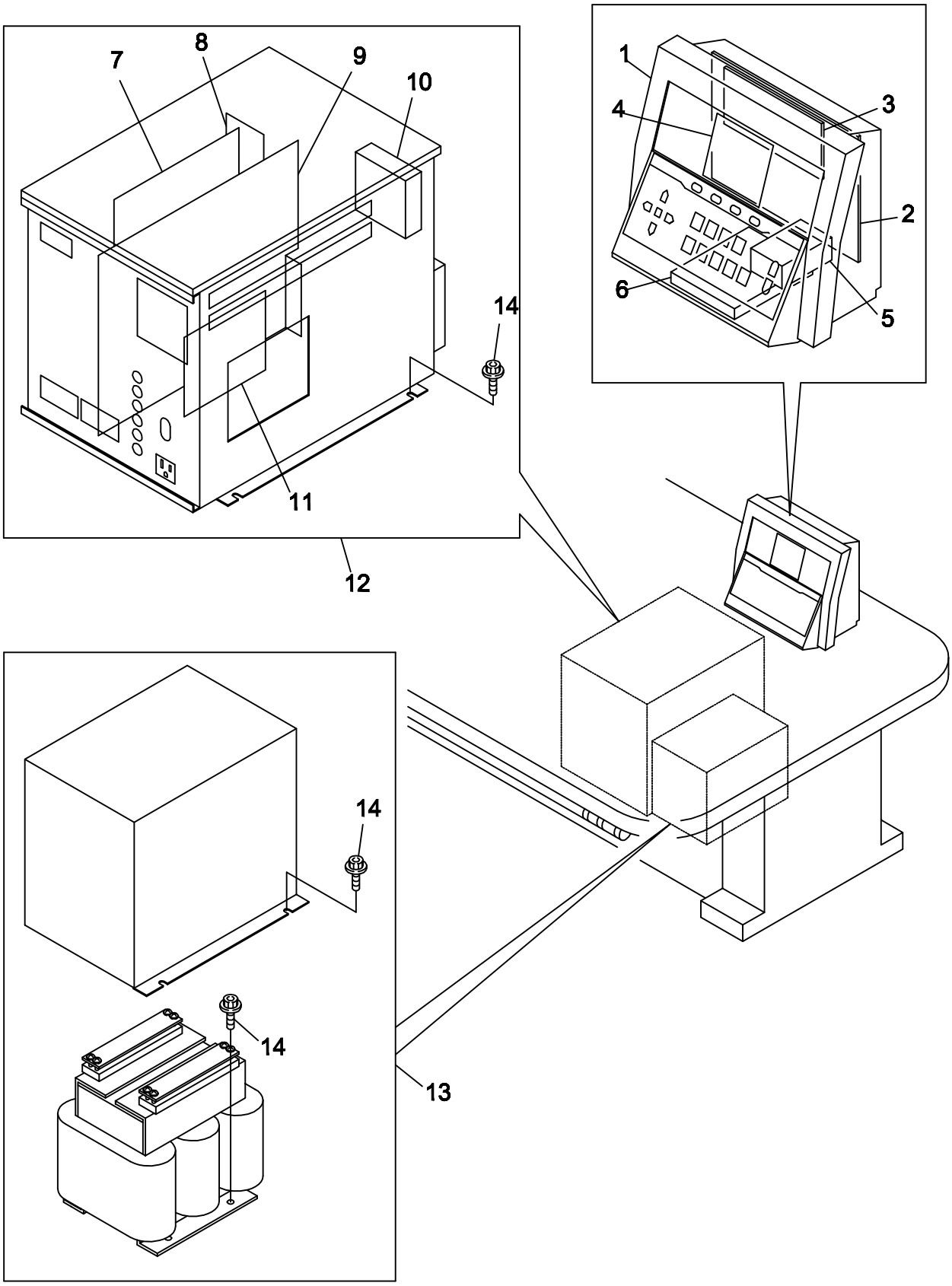

BENYME-ZN/ZQ

11A-1-2 Control A (NY-2)

ITEM	LIST NO.	DESCRIPTION	QTY	NOTE
1.	EAY033A1	NS Automat Controller	1	
2.	EBY01250	5611 N CPU Board	1	
3.	EBY01240	5430 N Memory Board	1	
4.	EBY01260	LCD Display (SE-4469-1)	1	
5.	EBY01270	NS Automat Power Supply	1	
6.	EBY01352	Floppy Disk Drive	1	
7.	EBY01620	5751 NY Inverter Board	1	
8.	EBY01900	5860 NY Back Board (UAD-IXA)	1	
9.	EBY01890	5850 NY Control Board Unit (UAD-IXA)	1	
10.	FA904147	Cooling Fan (UAD-IXA)	1	
11.	EBY01910	5870 NY Power Board (UAD-IXA)	1	
12.	EAY046A2	NY Driver Unit (UAD-IXA)	1	
13.	EAY046A3	NY Transformer, 1P (UAD-IXA)	1	
	EAY047A3	NY Transformer, 3P (UAD-IXA)	1	
14.		Hex Socket Flange Bolt M6x12		

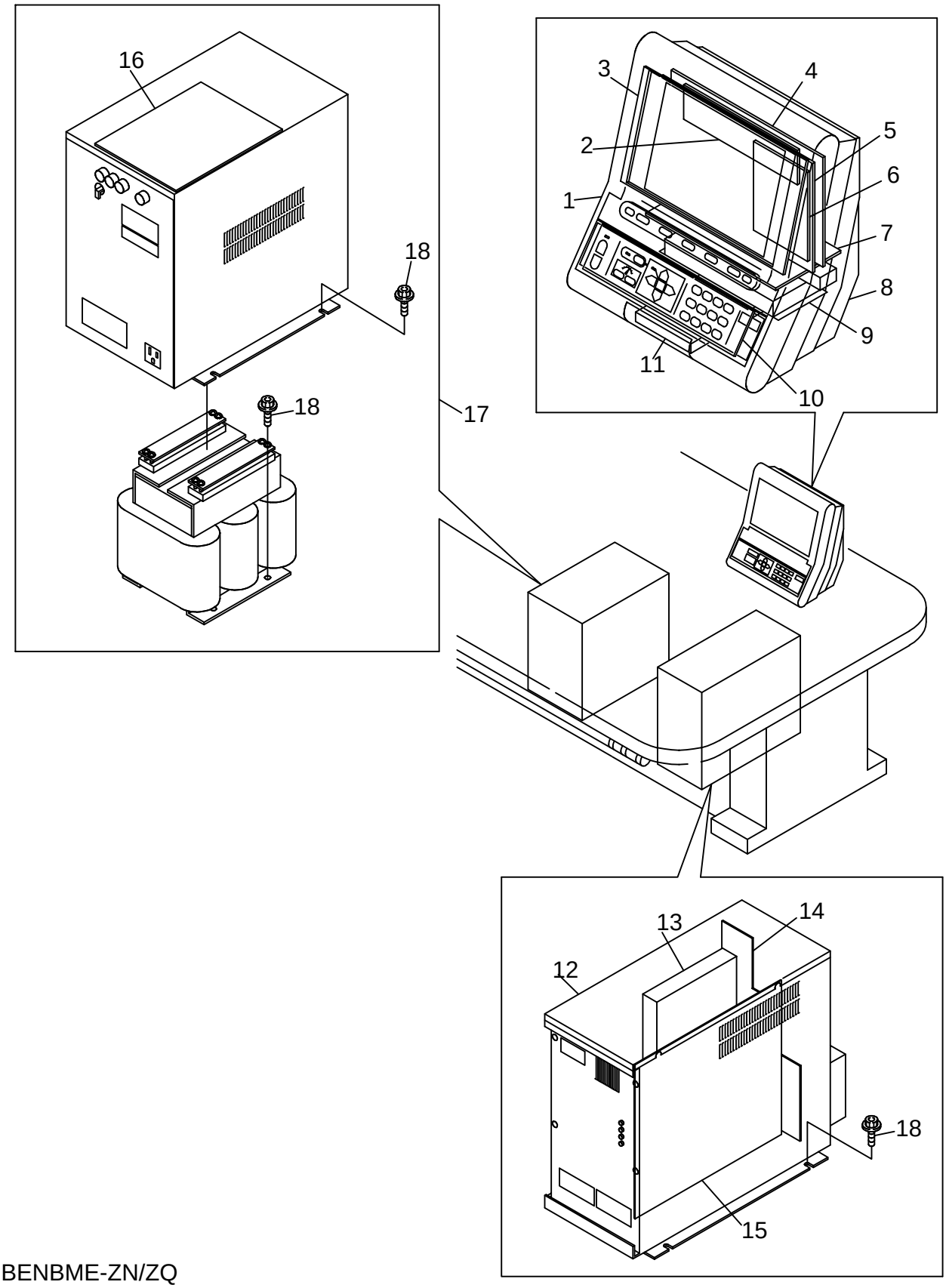
16
18
18
17
3
4
2
5
6
1
7
8
9
11
10
13
14
12
18
15

11A-2 Control A (NB)

ITEM	LIST NO.	DESCRIPTION	QTY	NOTE
1.	EAY038A1	NR Automat Controller	1	
2.	EBY01550	5480 Memory Board (NR)	1	
3.	EBY01600	Color LCD (NR)	1	
4.	EBY01540	5421 I/O Board (NR)	1	
5.	EBY01530	5411 CPU Board (NR)	1	
6.	EBY01580	5470 Back Light Board (NR)	1	
7.	EBY01560	5452 Back Board (NR)	1	
8.	EBY01510	Automat Power Cable	1	
9.	EBY01590	NR Power Switch Supply (MRW160)	1	
10.	EBY01570	5460 Switch Connecting Board (NR)	1	
11.	EBY01352	Floppy Disk Drive	1	
12.	EAY036A2	NY Driver Unit (UAD-IX)	1	
13.	EBY01620	5751 NY Inverter Board	1	
14.	EBY01400	5820 NY Back Board (UAD-IX)	1	
15.	EBY01390	5810 NY Control Board (UAD-IX)	1	
16.	EBY01420	5310 NY Power Board, 1P (UAD-IX)	1	
	EBY01430	5310 NY Power Board, 3P (UAD-IX)	1	
17.	EAY036A3	NY Transformer, 1P (UAD-IX)	1	
	EAY037A3	NY Transformer, 3P (UAD-IX)	1	
18.		Hex Socket Flange Bolt M6x12		

11B CONTROL B

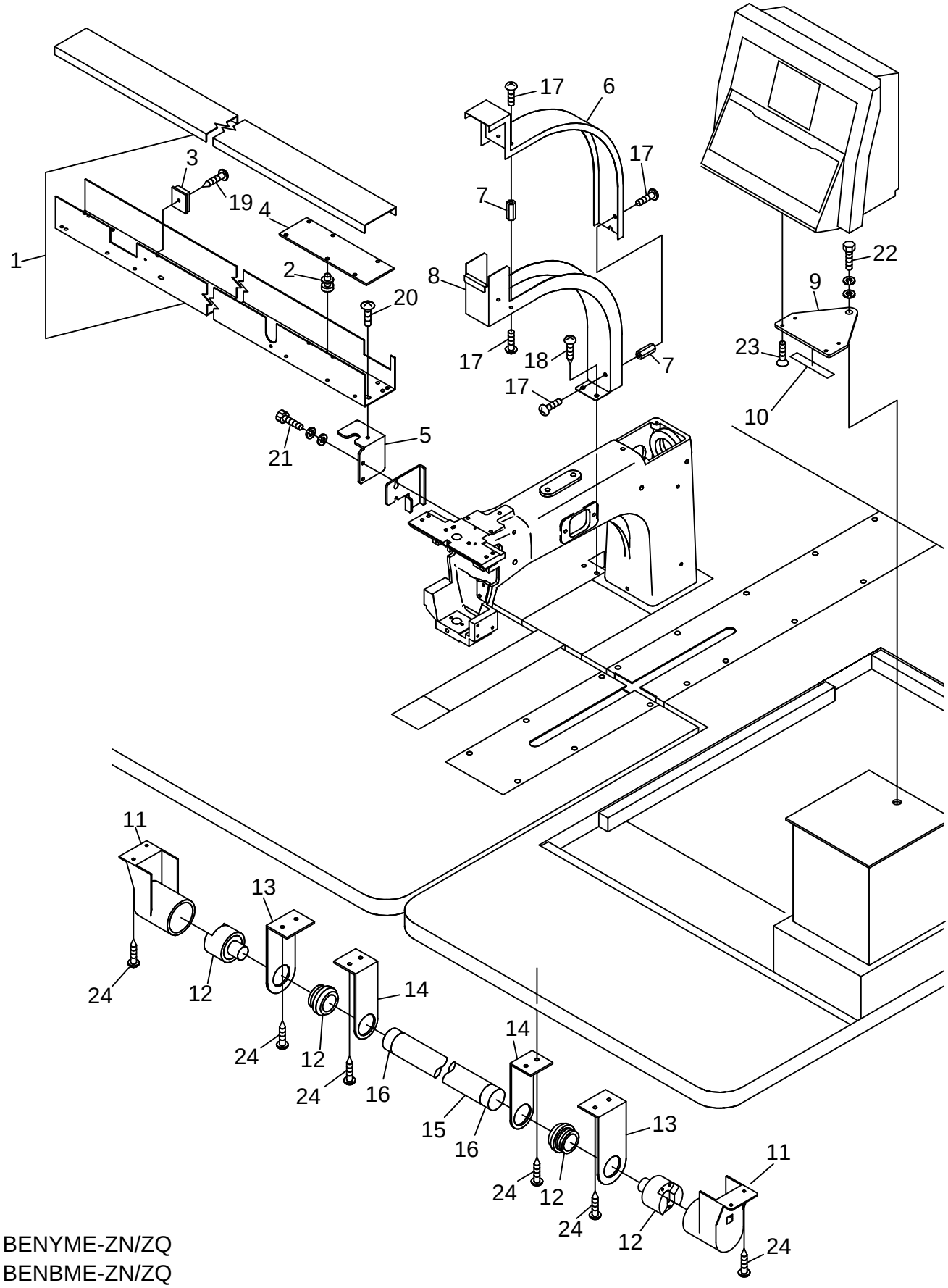

BENYME-ZN/ZQ
BENBME-ZN/ZQ

11B Control B

(H=Head Qty) (*Depends on Machine Type)

ITEM	LIST NO.	DESCRIPTION	QTY	NOTE
1.	LA510120	Cable Duct Set (2-6)	1	*
2.	A9068033	Duct Board Spacer, ZN (KGLS-6RF)	Hx6	
3.	A9068032	Clamp (FCW-26)	Hx1	
4.	EBY01661	4631 Head Duct Board (ZN/ZQA)	Hx1	
5.	LA330130	Duct Support Bracket		
6.	KX510021	Cable Duct No. 4 Cover (ZN)	1	
7.	KX510150	Nut for Cable Duct (ZN)	3	
8.	KX510011	Cable Duct No. 4 (ZN)	1	
9.	HV330020	Automat Bracket (NS)	1	NS/NY
	HV330040	Automat Bracket (NR)	1	NR/NB
10.	HV330022	Automat Bracket Spacer	2	
11.	KF530151	Push Button Switch Cap	2	
12.	KF530120	Push Button Switch (Green)	1	
	KF530110	Push Button Switch (Red)	1	
13.	KC530230	Bar Switch Bracket (Large)	2	
14.	KC530240	Bar Switch Bracket (Small)	2	
15.	KF530160	Bar Switch	1	Cut Product
16.	KF530171	Bar Switch Cap	2	
17.		Pan Screw M4x6		
18.		# 8-18 x ¾” Tek Screw		
19.		Tapping Screw ϕ3x8		
20.		Truss Screw M5x8		
21.		Hex Socket Bolt M4x16 (with Washers)		
22.		Hex Bolt M10x25		
23.		Flush Screw M4x10		
24.		# 8-18 x 1” Tek Screw		

12-1 ACCESSORIES (ZN)

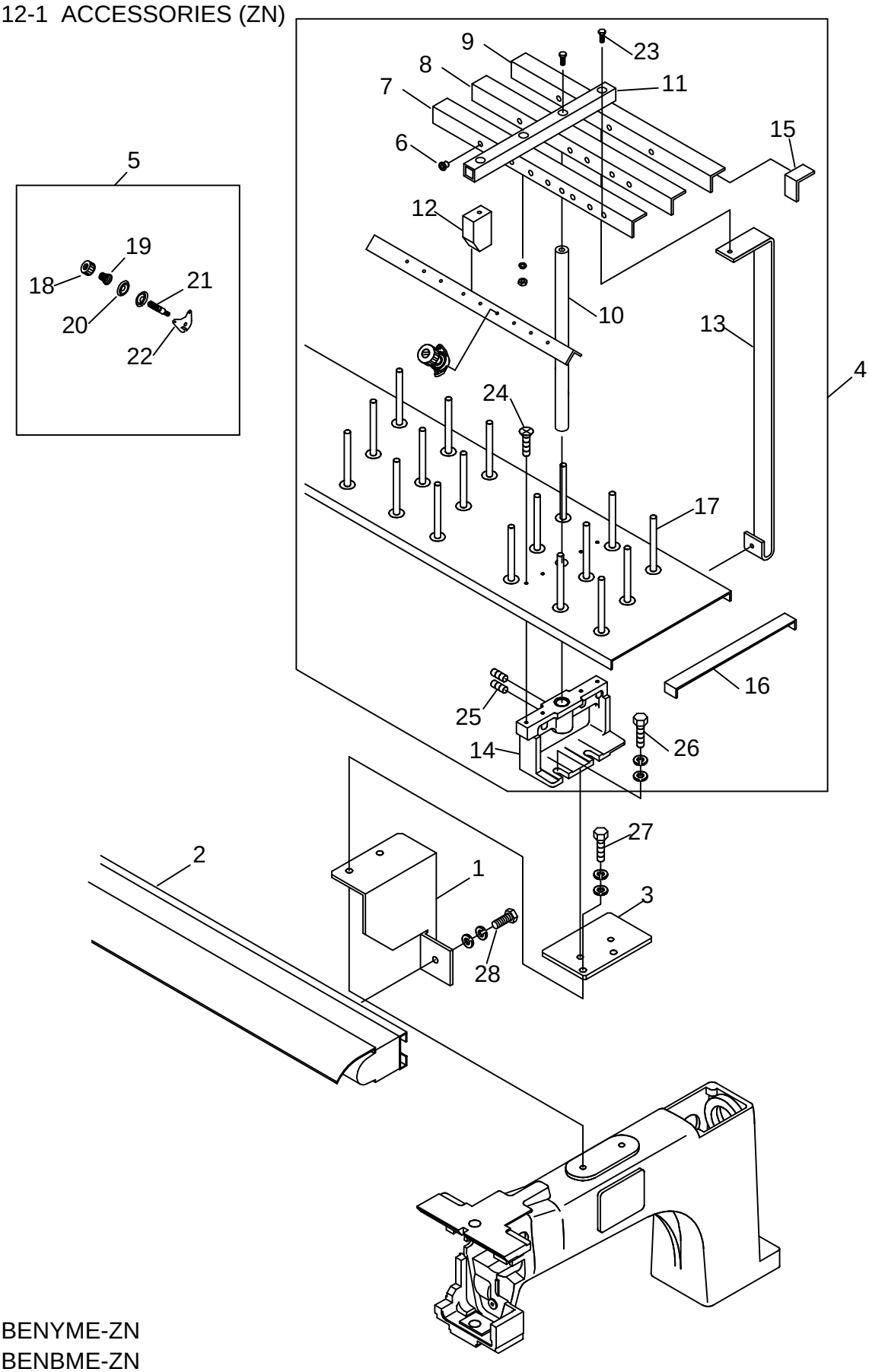

BENYME-ZN
BENBME-ZN

12-1 Accessories (ZN)

(H=Head Qty) (* Depends on Machine Type)

ITEM	LIST NO.	DESCRIPTION	QTY	NOTE
1.	A100305	ZN Lamp Support Bracket		*
2.	A100316	Lamp Fixture (4-520)		*
	A100435	Lamp Fixture, 220V (4-520)		*
	A100300	Lamp Fixture (6-520)		*
	A100329	Lamp Fixture, 220V (6-520)		*
3.	KX250090	Thread Stand Spacer (ZN)		
4.	A100400	Thread Stand Assembly (4-520)		*
	A110099	Thread Stand Assembly (6-520)		*
5.	HP241430	Upper Tension Assembly Complete	Hx9	
6.	HT240480	Thread Guide Eyelet (White)	Hx9	
7.		Thread Guide Support #3		*
8.		Thread Guide Support #4		*
9.		Thread Guide Support #5		*
10.		Thread Guide Support #2		*
11.	A400054	Thread Guide Attaching Base		*
12.	A400053	Thread Guide Support Spacer		*
13.	A100198	Rear Thread Stand Support		*
14.	A110053	Thread Stand Support (YN)		*
15.		Black Vinyl (3/4 x 3/4)		
16.		Black Vinyl (8 ¼ x 1)		
17.	A200097	Arm Spool Pin	Hx9	
18.	A100098	Thread Tension Knob		
19.	A100094	Thread Tension Spring		
20.	A100096	Thread Tension Washer		
21.	A100095	Thread Tension Stud		
22.	A100097	Thread Tension Base		
23.		Truss Screw M6x15		
24.		Flush Screw M4x12		
25.		Hex Socket Set Screw M5x8		
26.		Hex Bolt M8x20		
27.		Hex Bolt M8x20 (with Washers)		
28.		Hex Bolt ¼-20 x 1”		

12-2 ACCESSORIES (ZQ)

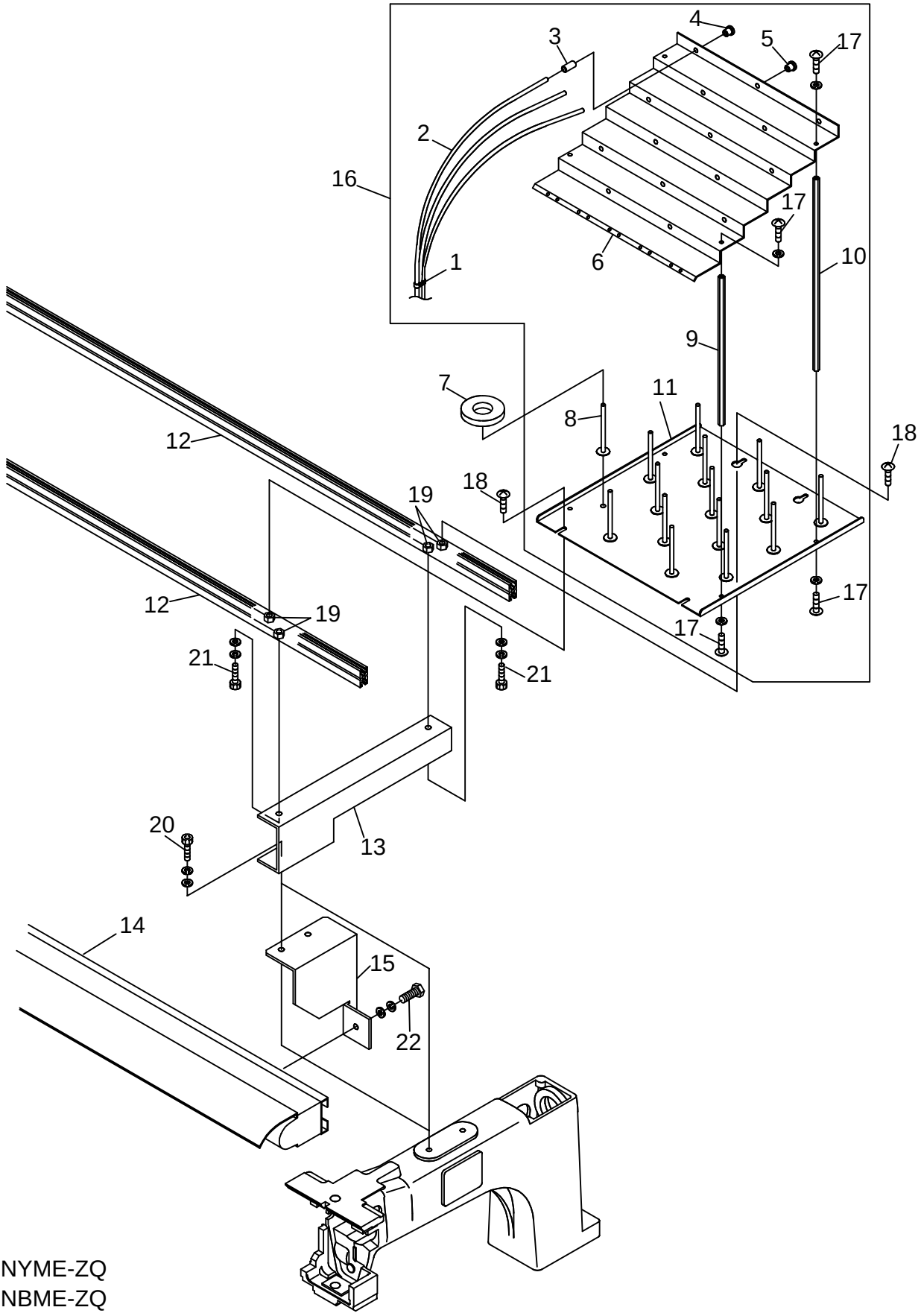

BENYME-ZQ
BENBME-ZQ

12-2 Accessories (ZQ)

(H=Head Qty) (* Depends on Machine Type)

ITEM	LIST NO.	DESCRIPTION	QTY	NOTE
1.		Tube Clip	Hx15	
2.	RD710310	Thread Stand Tube		
3.		Tube Holder	Hx15	
4.	A110005	Thread Guide Eyelet (Black)	Hx15	
5.	HT240480	Thread Guide Eyelet (White)	Hx15	
6.		Thread Guide Upper Base	Hx1	
7.	KF710390	Thread Stand Felt Pad	Hx15	
8.	A200097	Arm Spool Pin	Hx15	
9.		Front Thread Stand Support	Hx2	
10.		Rear Thread Stand Support	Hx2	
11.		Thread Stand Base	Hx1	
12.	A100506	ZQ Mounting Rail (1935L) 4-520		
	A100507	ZQ Mounting Rail (2975L) 6-520		
13.	LA710011	Thread Stand Attaching Base ZQ/ZNA (LG)		*
14.	A100316	Lamp Fixture (4-520)		*
	A100435	Lamp Fixture, 220V (4-520)		*
	A100300	Lamp Fixture (6-520)		*
	A100329	Lamp Fixture, 220V (6-520)		*
15.	A100305	ZN Lamp Support Bracket		*
16.	A100498	Thread Stand, ZQ (Black Tube)	Hx1	*
17.		Truss Screw M5x10		*
18.		Truss Screw M6x12		*
19.		Hex Nut M6		
20.		Hex Socket Bolt M8x20		
21.		Hex Socket Bolt M6x12		
22.		Hex Bolt ¼-20 x 1”		